Clean
Energy
Systems

Fabrication and Testing of an Advanced Nonpolluting Turbine Drive Gas Generator

Keith L. Pronske

Clean Energy Systems, Inc.

Turbine Power Systems Conference and Condition Monitoring Workshop

February 25, 2002

Galveston, TX

Clean Energy Systems

Schematic Diagram of CES' Gas Generator

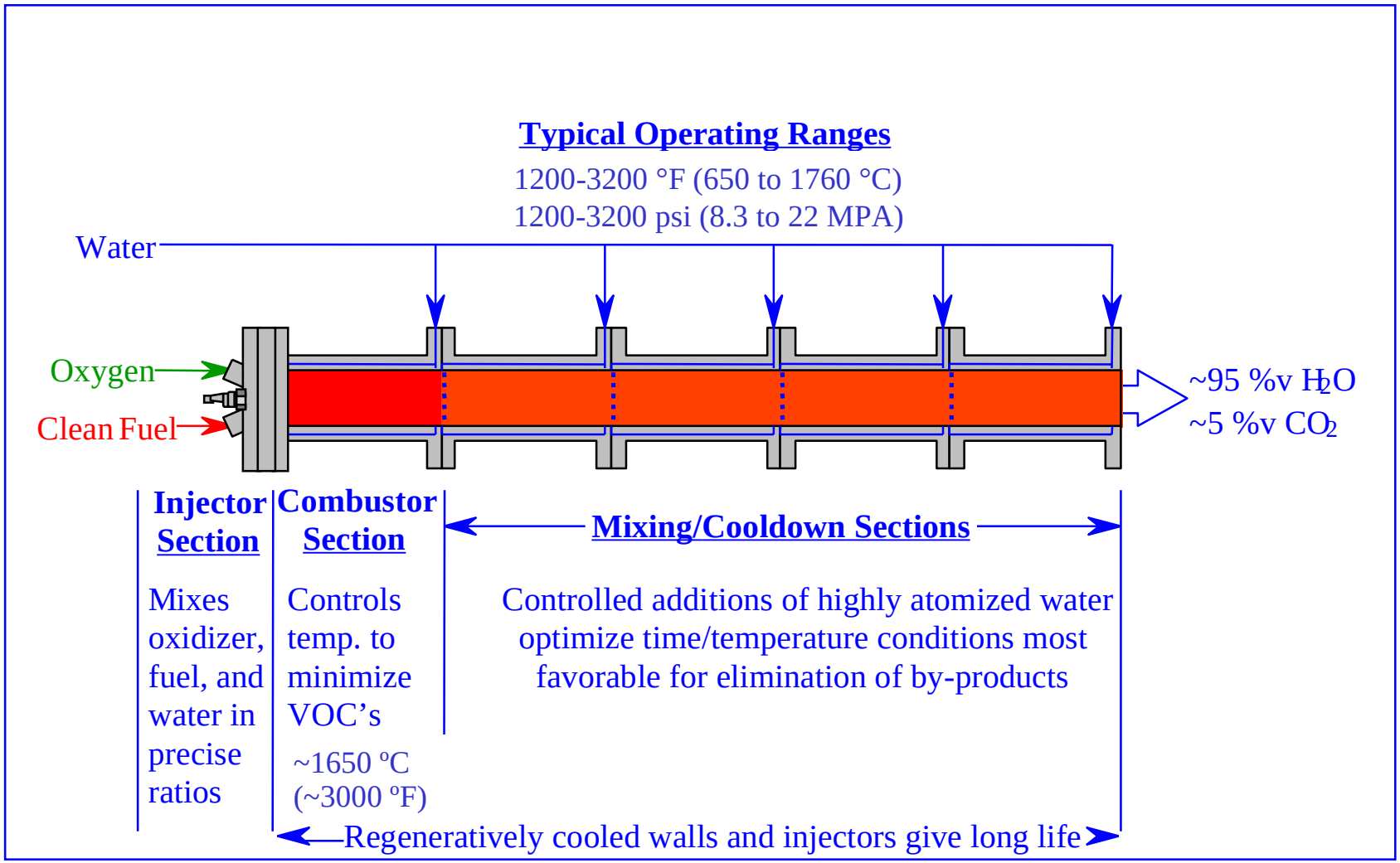

Clean Energy Systems

Zero-Emission Power Plants

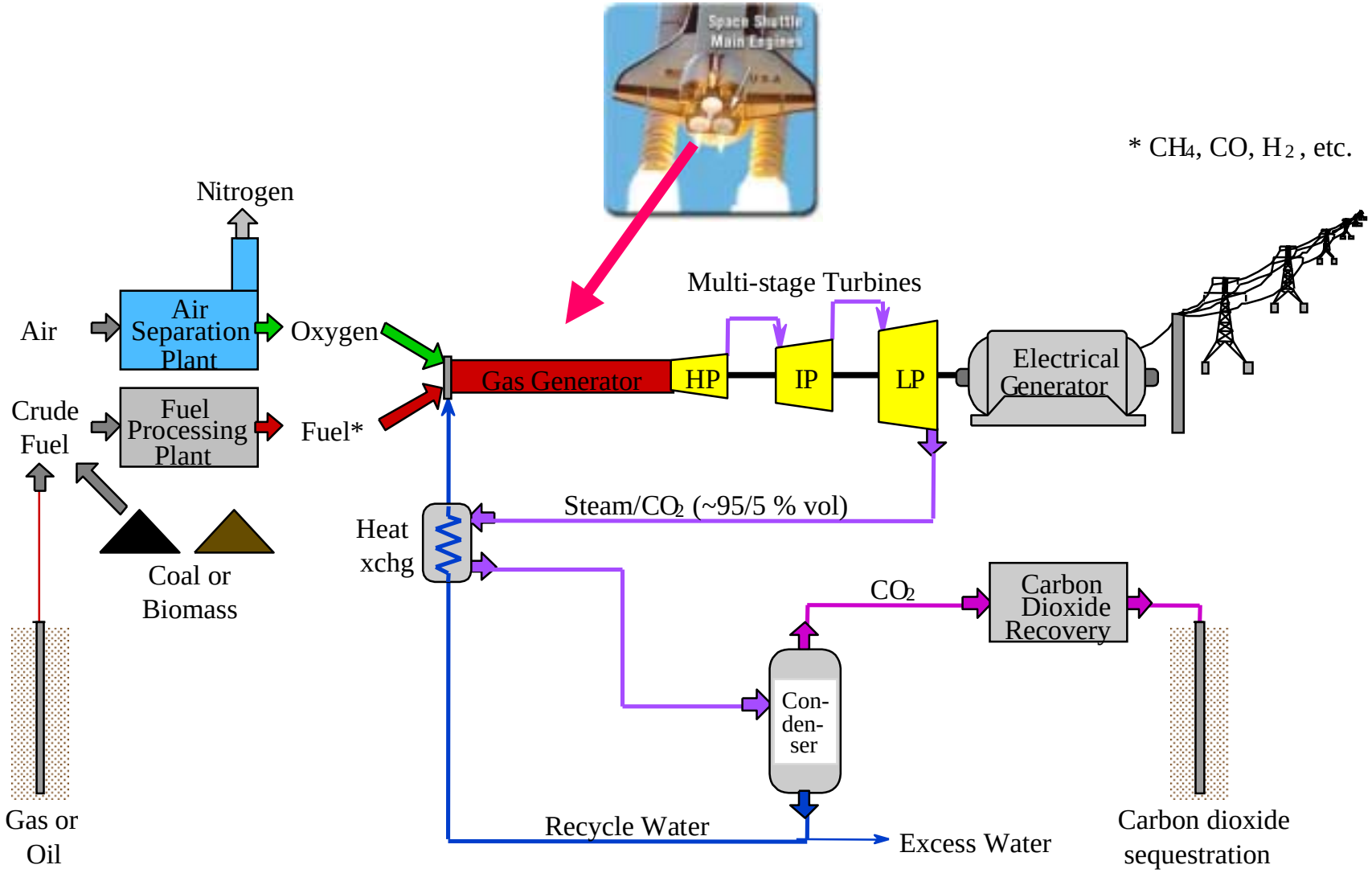

Clean
Energy
Systems

110 kW Gas Generator Test Program

- Jointly funded by CES and California Energy Commission (Energy Innovations Small Grant Program).
- Program Objectives:
  - Demonstrate premixing injector element design.
  - Demonstrate time-temperature process control in cool-down modules to promote by-product re-association.
- CES built a lab-scale GG and test bench.
- Testing successfully completed at UC Davis.

Clean
Energy
Systems

110 kW Gas Generator Test Program

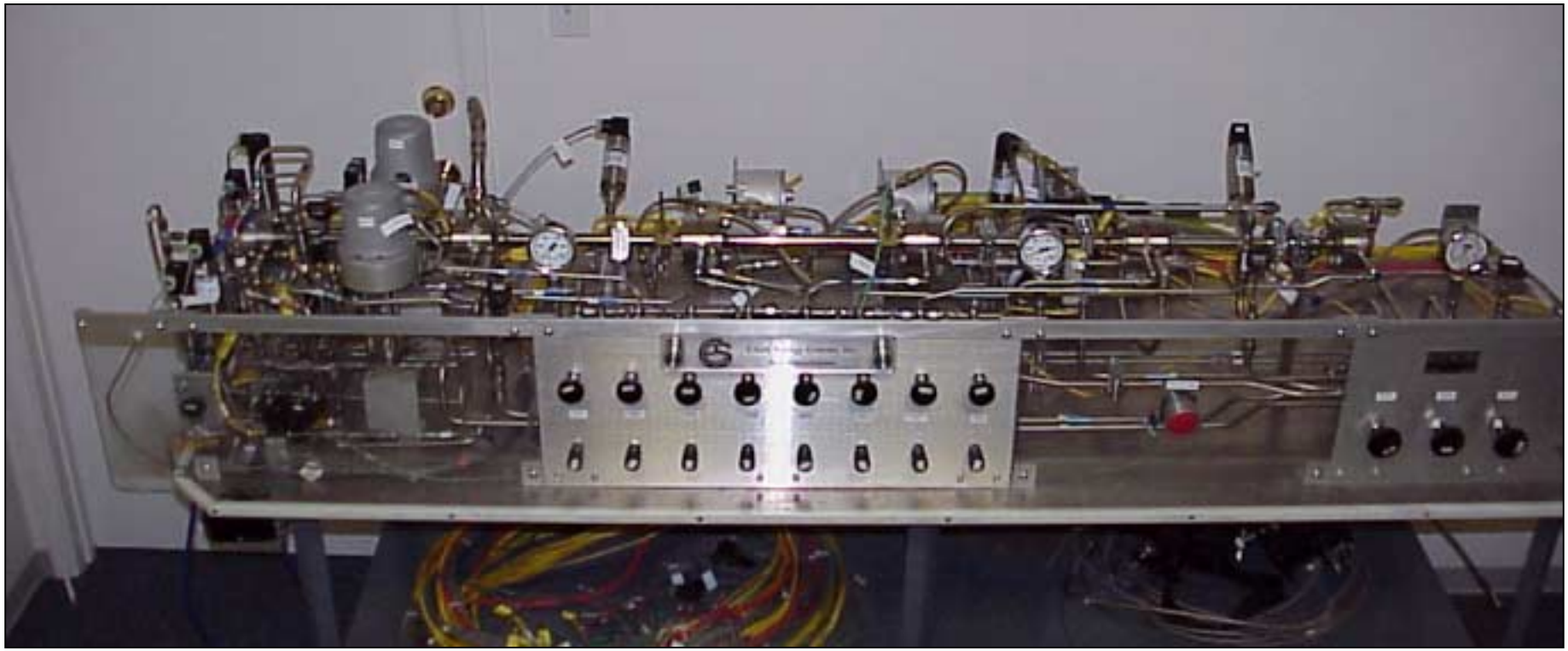

Clean
Energy
Systems

110 kW Gas Generator Test Program

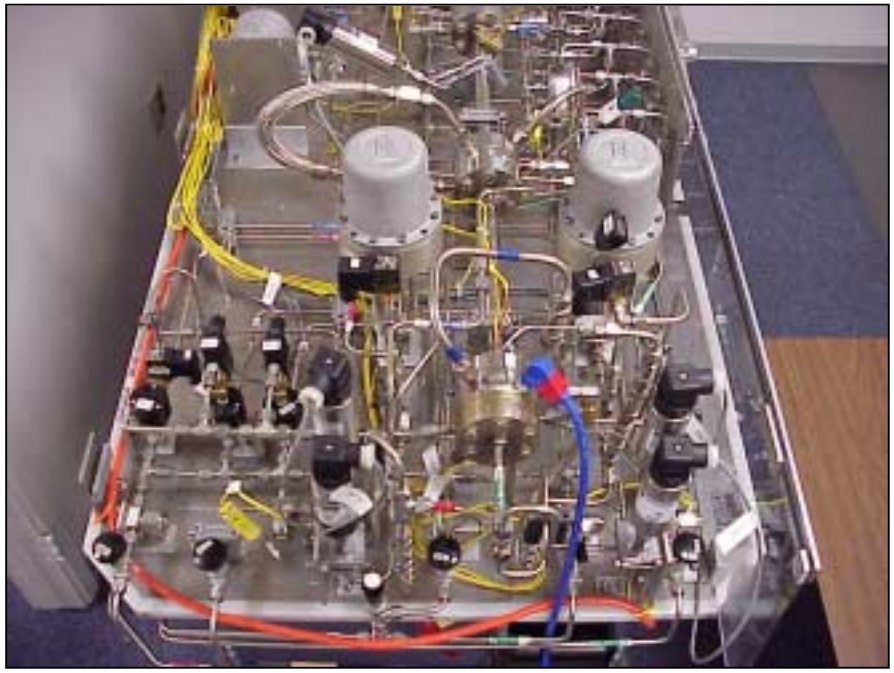

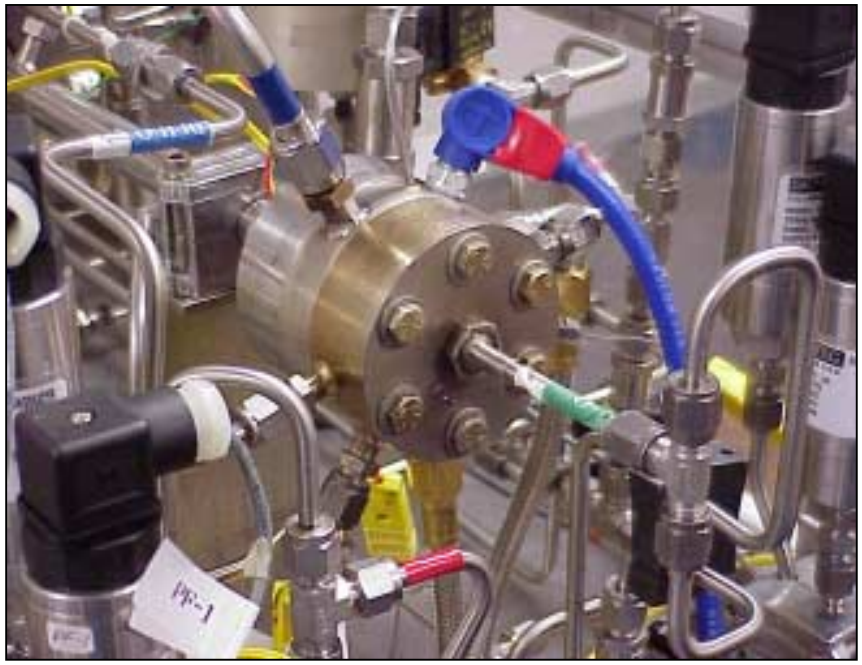

Clean Energy Systems

Vision 21 - 10 MW Gas Generator

- CES awarded $1.8 million (of $2.7 million) under DOE/NETL Vision 21 program
- Design, fabricate and test a 10 MW gas generator
- Test matrix with:
  - Operating pressure of 1500 psia,
  - Temperatures from 1200 - 3000°F
  - Igniter checkout
  - Two injector configurations
- Ignitor testing 4Q 2001 – Gas Generator April, 2002

Clean
Energy
Systems

Vision 21 - 10 MW Gas Generator

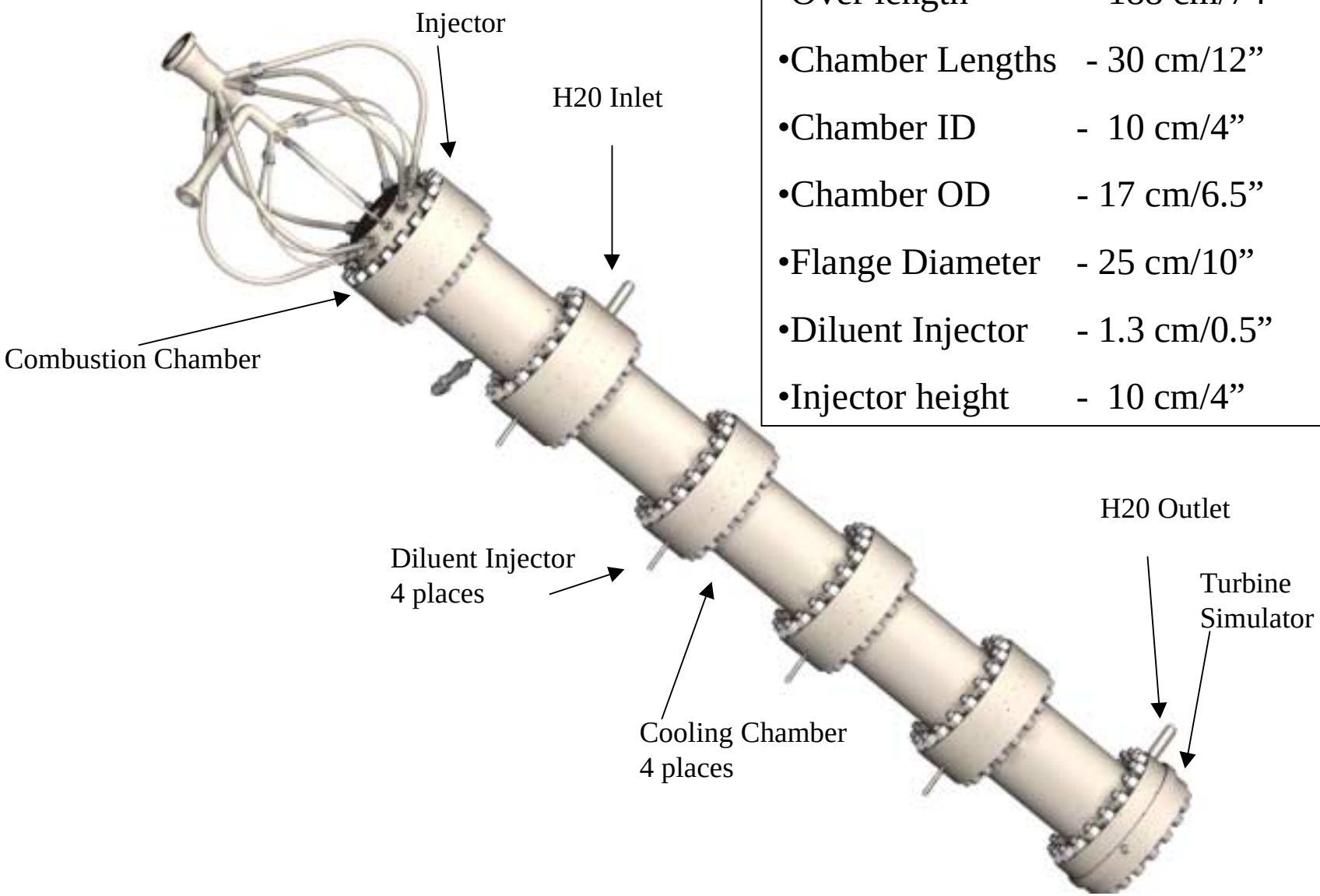

•Over length	- 188 cm/74”
•Chamber Lengths	- 30 cm/12”
•Chamber ID	- 10 cm/4”
•Chamber OD	- 17 cm/6.5”
•Flange Diameter	- 25 cm/10”
•Diluent Injector	- 1.3 cm/0.5”
•Injector height	- 10 cm/4”

Clean
Energy
Systems

10 MW Gas Generator – General Arrangement

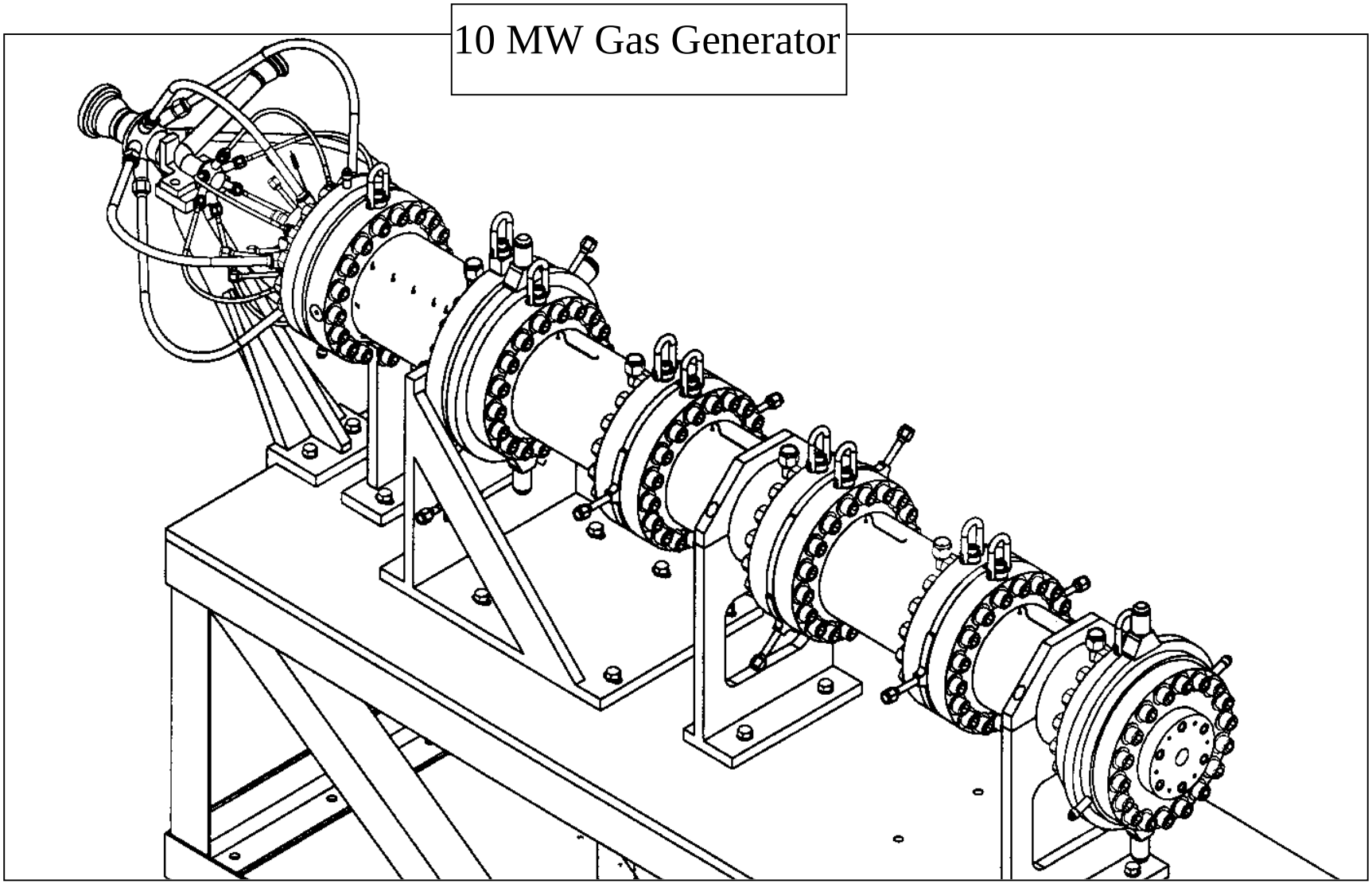

Clean
Energy
Systems

10 MW Gas Generator – Ignitor Testing

Clean Energy Systems

10 MW Gas Generator – Ignitor Testing

Oxygen Core

Oxygen Coolant

Clean Energy Systems

10 MW GG – Injector Head & Uncooled Chamber

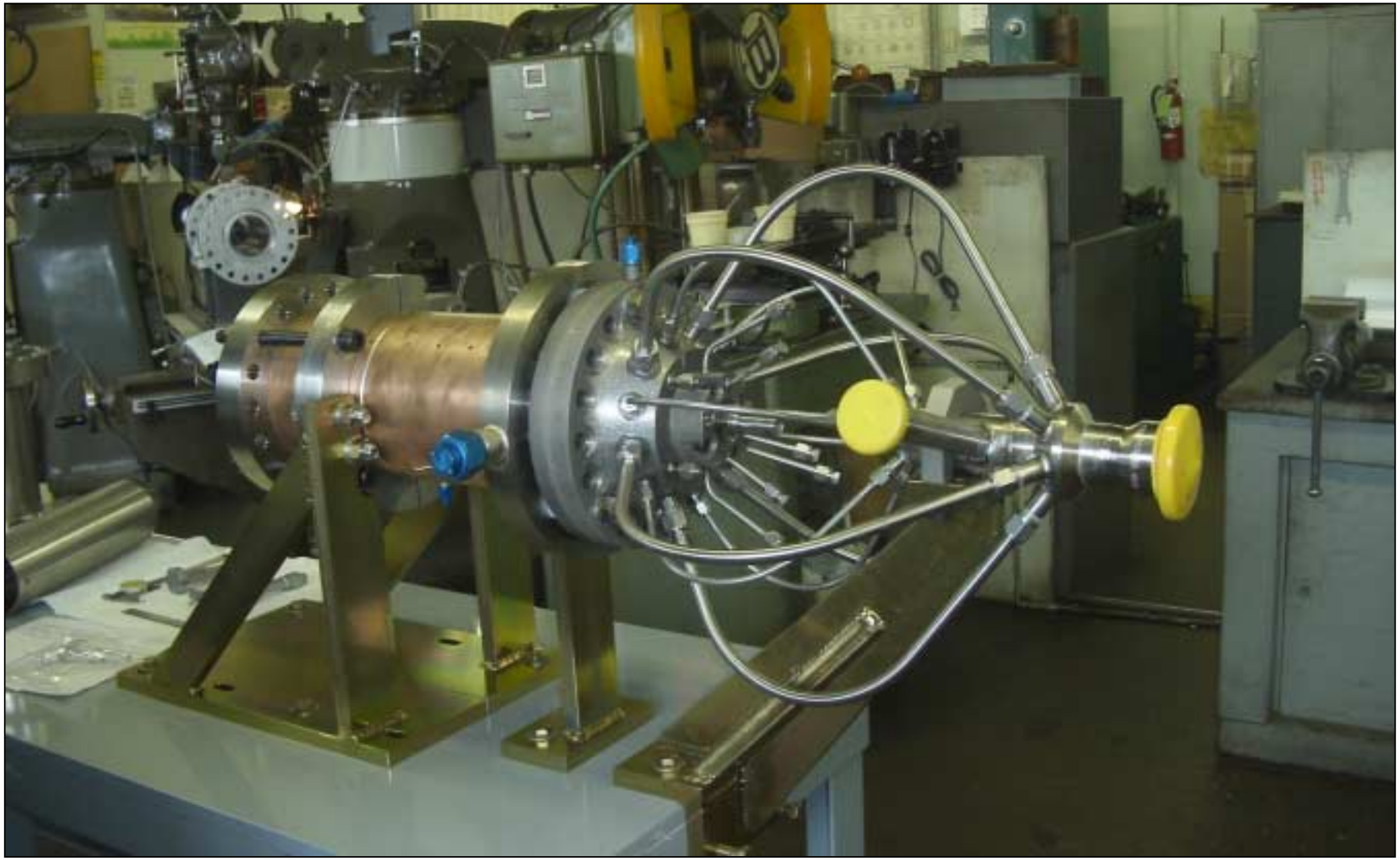

Clean Energy Systems

10 MW Gas Generator – Mockup Assembly

Clean
Energy
Systems

10 MW GG – Injector Body

Clean
Energy
Systems

10 MW GG Diffusion Bonded Injector

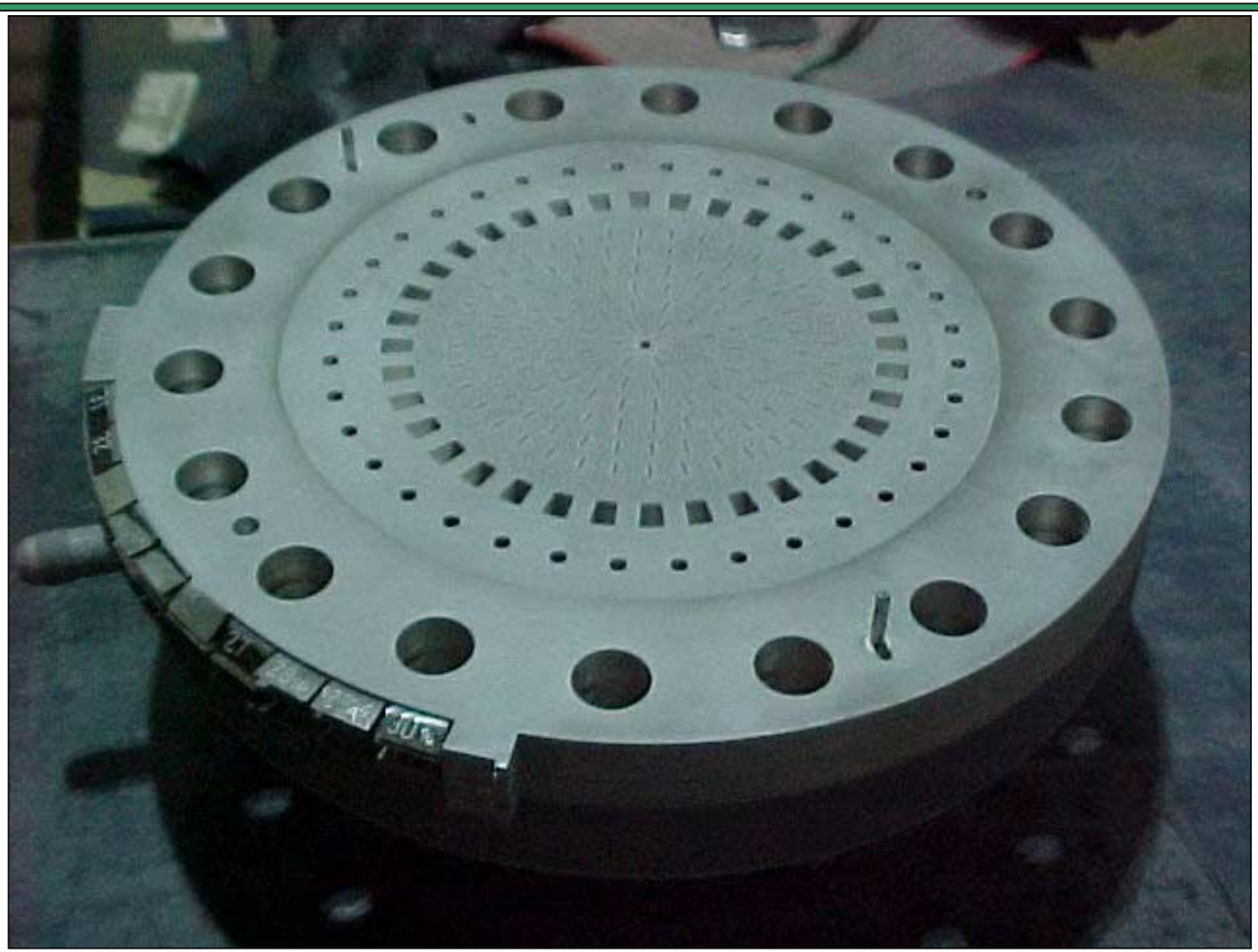

Clean Energy Systems

10 MW Gas Generator – Platelet Detail

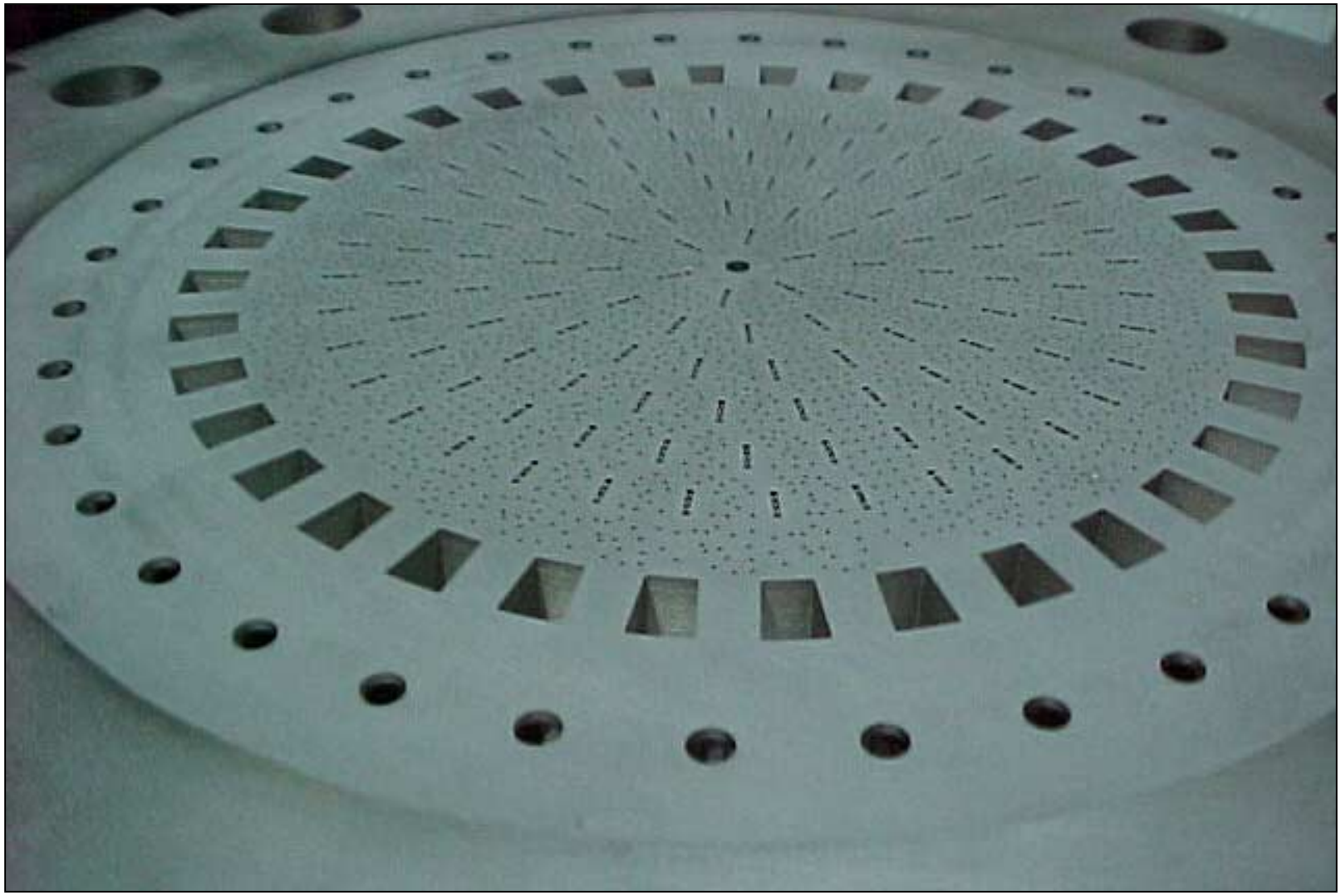

500 kW Demo Project

- Installation of 500 kW zero-emission gas-fired power plant existing utility plant in California.
- Purpose is to demonstrate long-term operation of "modified" GG, steam turbine driven by steam/CO_2, and to separate carbon dioxide from steam.
- Agreements signed with Air Liquide and Mirant.
- Contract signed for $2 million in funding from the California Energy Commission.
- Expected run time of two years.
- Commercial operation late 2002/early 2003.

500 kW Demo Project

500 kW Demo Project

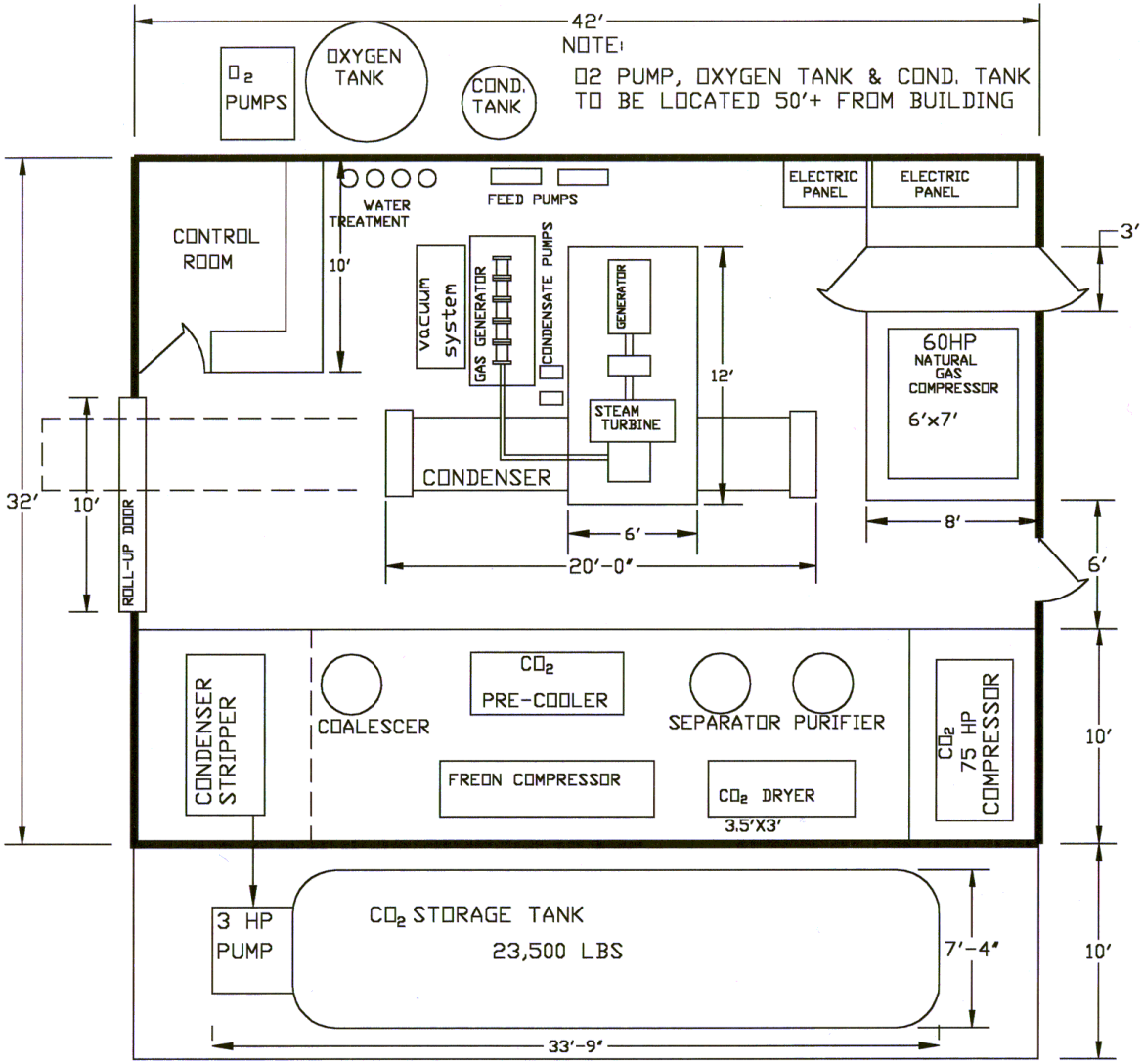

500 kW Demo Project

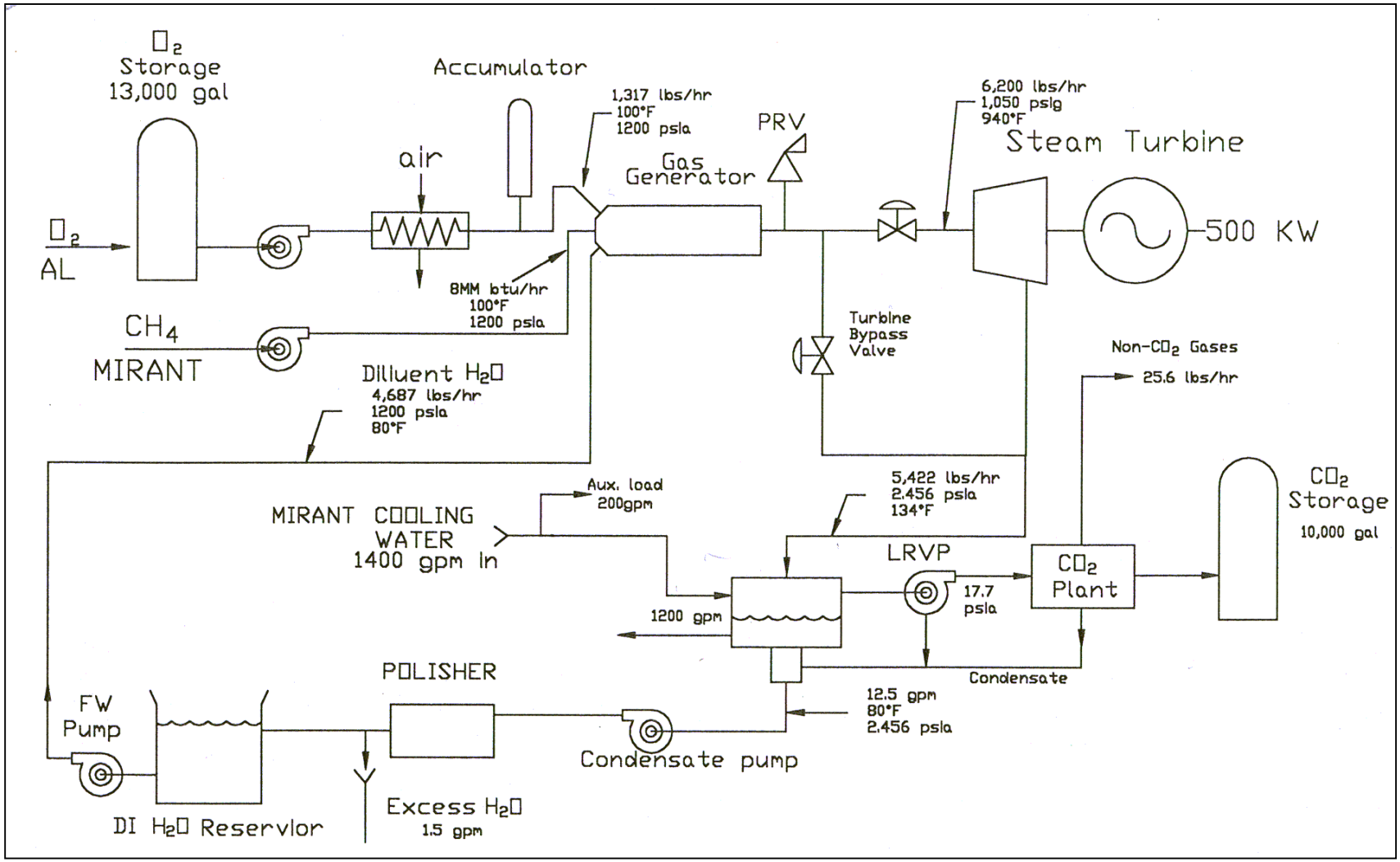

Clean Energy Systems

Cost Comparison

Today's Market: ***Smaller plants compete with wind and solar***

	CES Current (20 MW)	CES Current (50 MW)	WIND Best Case (100 MW)
Cap Cost ($/kW)	**1,800**	**1,400**	**715**
Efficiency (%)	**35**	**35**	**-**
Gross Electricity Cost ($/MWH)	**59**	**51**	**41**
Byproduct Sales ($/MWH)	**6**	**6**	**0**
Net Electricity Cost ($/MWh)	**53**	**45**	**41**
Air Emissions	**None**	**None**	**None**

- Fuel at $2.50/MMBtu; CO_2 sales at $10/ton; Baseload operation
- Typical windpower price: $40 - $60/MWh

Clean Energy Systems

Cost Comparison

Long Term: Gas-Fired Plants

Improved plant efficiency = cost competitiveness

	CES Near-Term (100 MW)	CES Long-Term (400 MW)	CCGT (Long-Term) (400 MW)
Cap Cost ($/kW)	1,050	690	650
Efficiency (%)	51	60	60
Gross Electricity Cost ($/MWH)	45	31	30
Byproduct Sales ($/MWH)	10	5	0
Net Electricity Cost ($/MWh)	35	26	30
Air Emissions	None	None	NOx, CO_2

Clean
Energy
Systems

Improvements in Turbine Technology

- With current “off the shelf turbines”, CES technology is cost competitive with “clean and green” energy.
- “Near-Term” turbine technology is based on work done by:
  - •Europe’s Advanced 700 ºC (1292 ºF) PF Power Plant.
  - •Aerospace industry - Space Shuttle Main Engine Turbines @ 1530 ºF (832 ºC) - built by Pratt & Whitney.
  - •US DOE Demonstration Project - Solar Turbine @ 1500 ºF (815 ºC).
  - •Japanese tests with 1700 ºC (3092 ºF), IP turbine blades.
- CES has a Letter of Intent with turbine manufacturer to develop Near-Term turbines.