NOx REDUCTION OF A 165 MW WALL FIRED BOILER UTILIZING AIR AND FUEL FLOW MEASUREMENT AND CONTROL

Author: Marion Cherry – Santee Cooper

Co-Authors: Dave Earley – Air Monitor Corporation

David Silzle – Air Monitor Corporation

AIR MONITOR CORPORATION

PROMECON

Airflow Measurement: Pitot-Fechheimer Probe

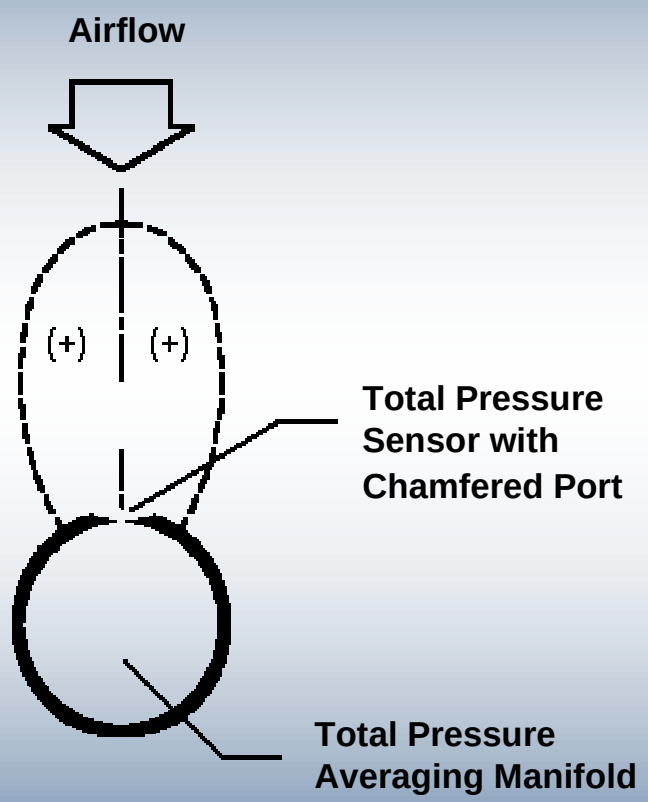

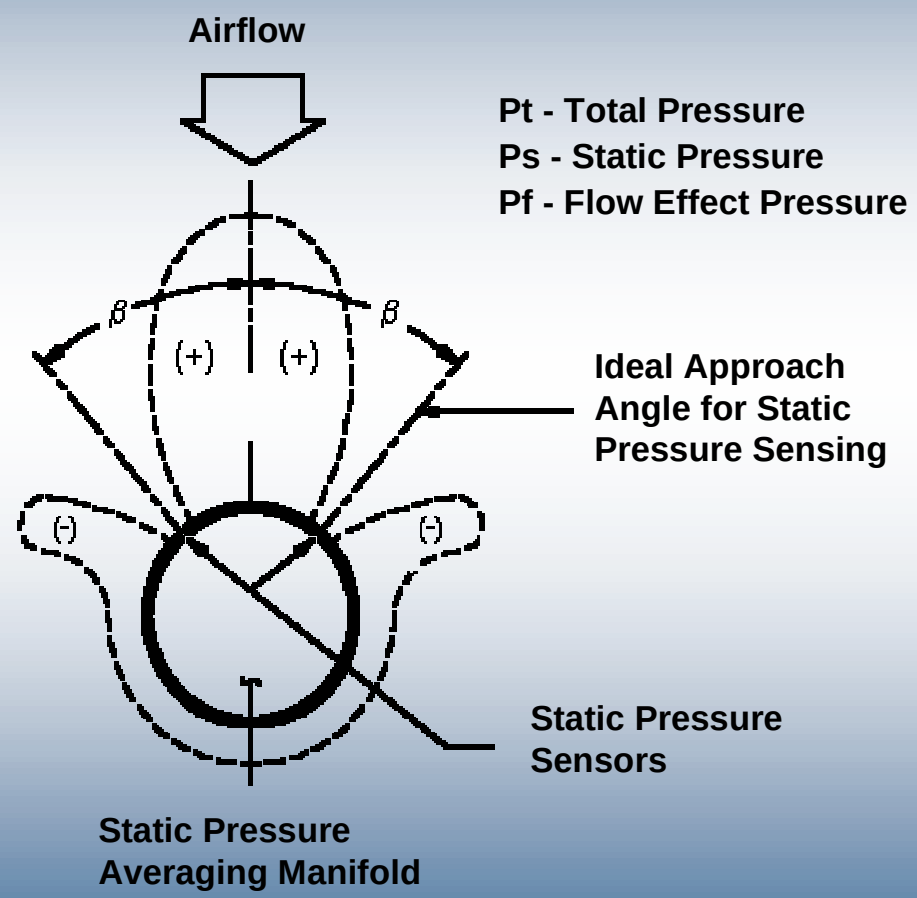

AIR MONITOR CORPORATION

PROMECON

CCV DAZ Low NO_x Burner

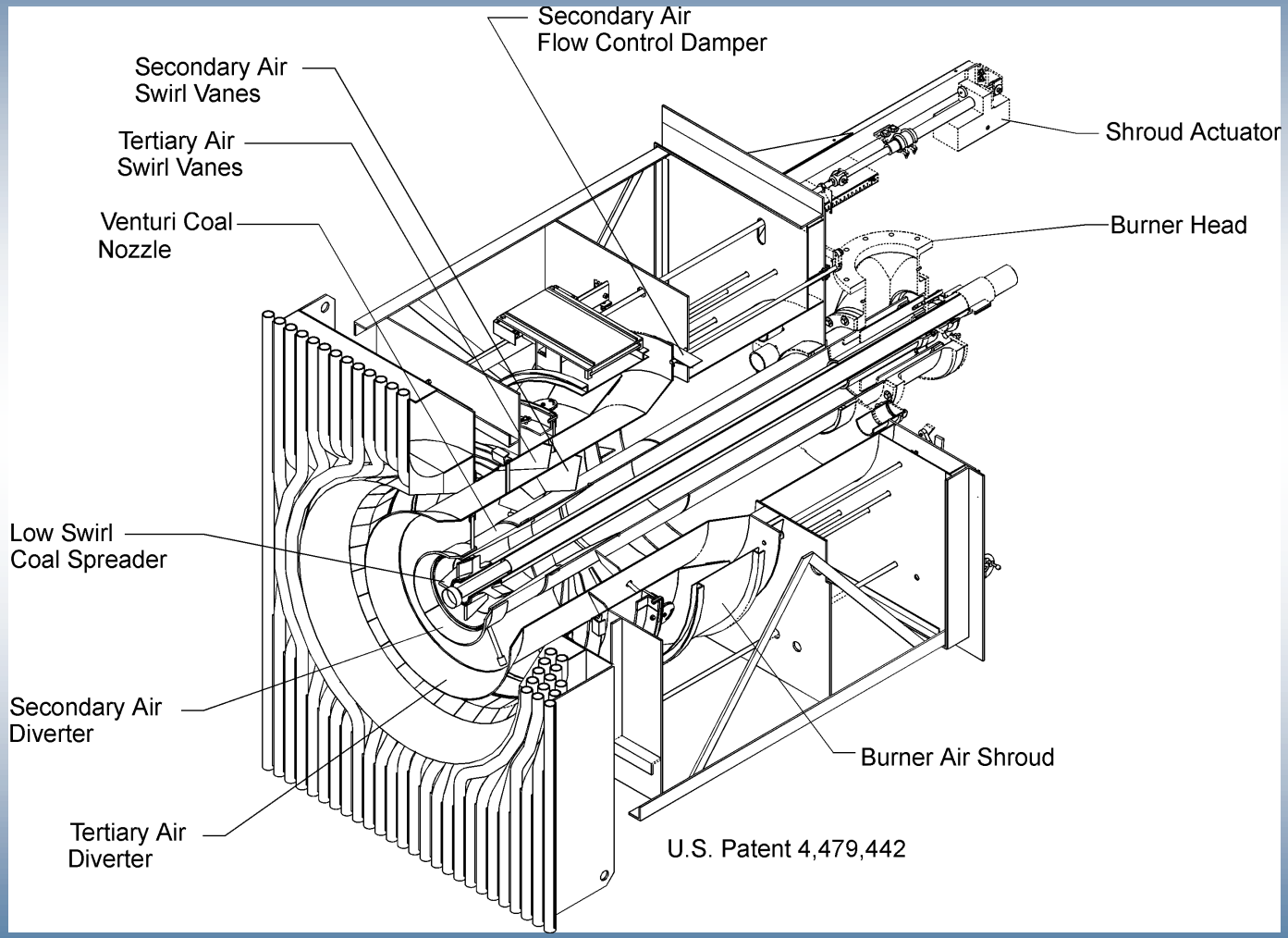

AIR MONITOR CORPORATION

PROMECON

CCV® Dual Air Zone Burner

Sectional View of Burner

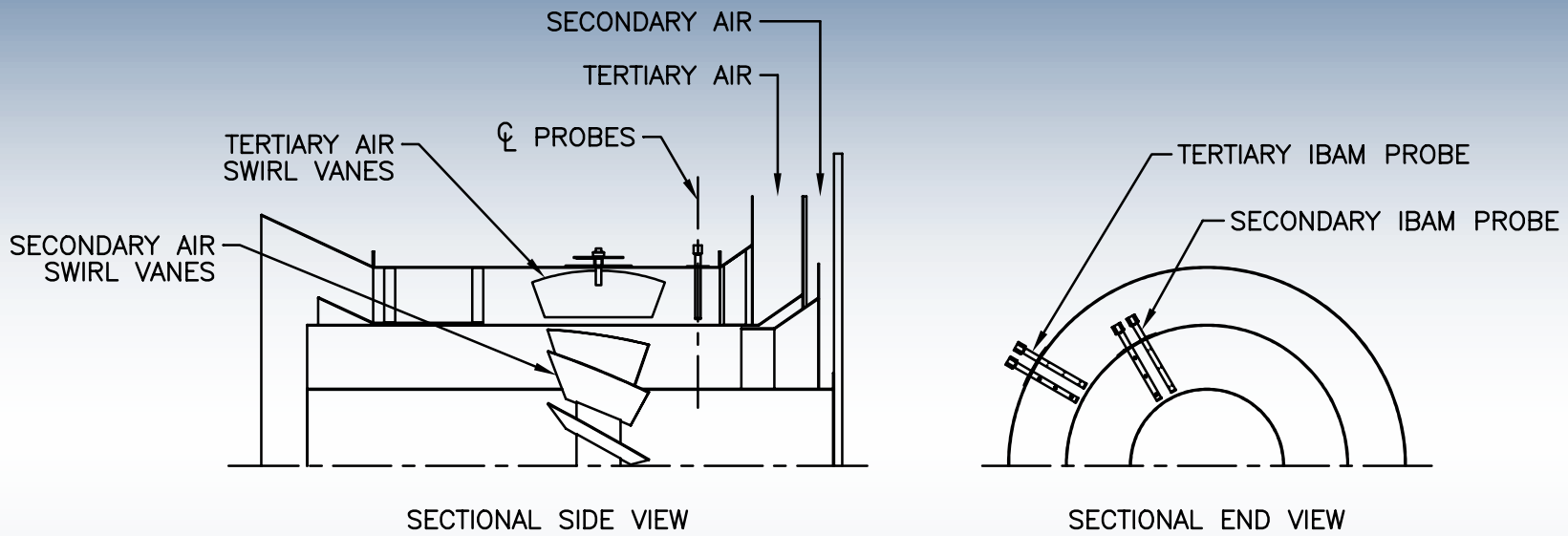

Coal Density Measurement

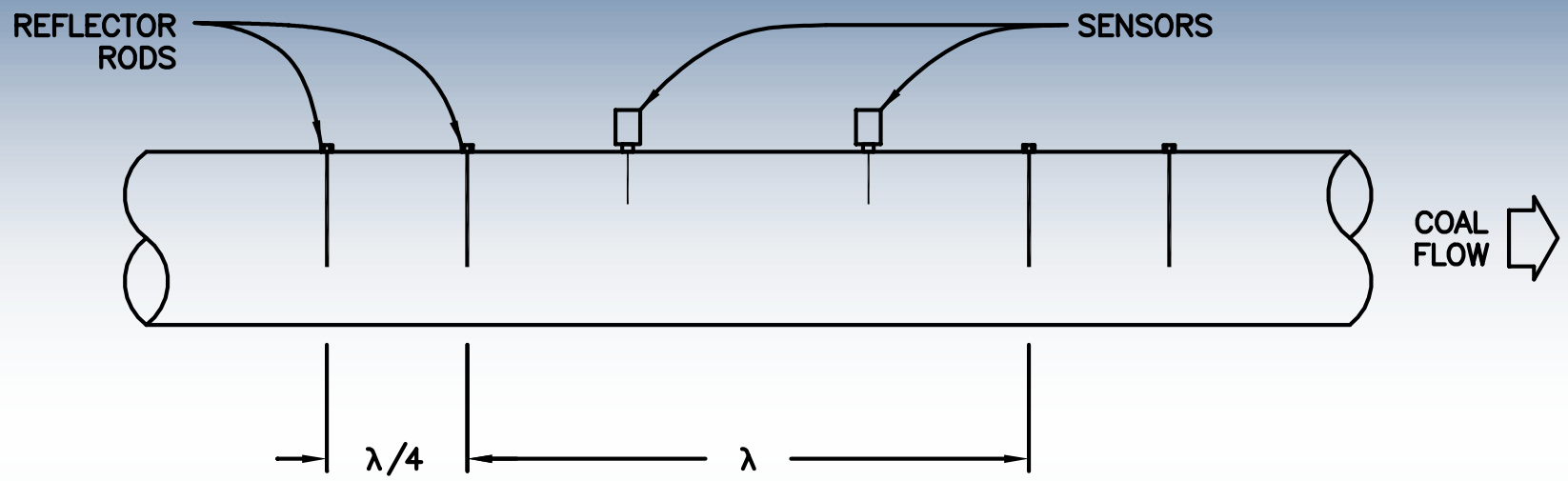

Coal Velocity Measurement

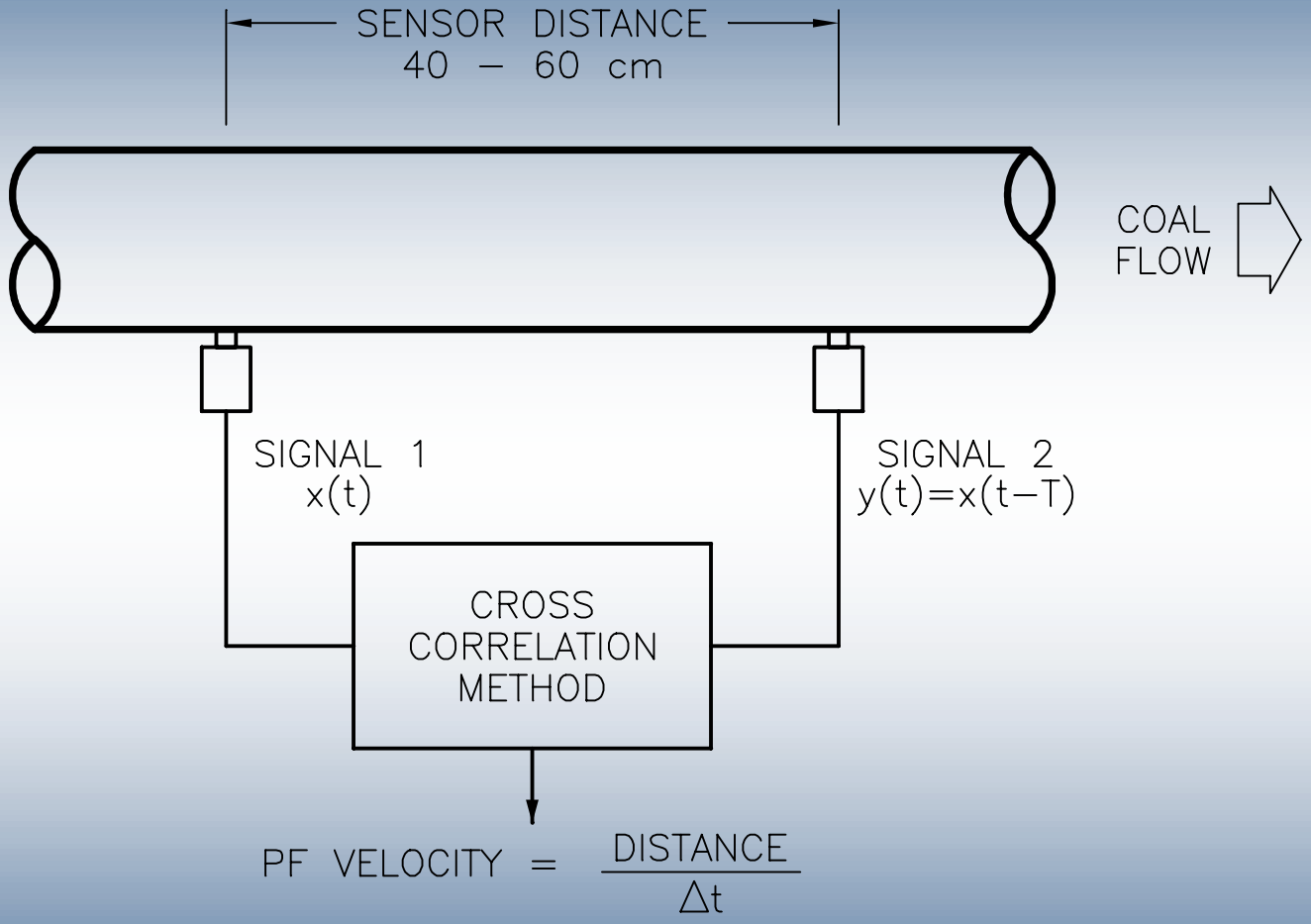

AIR MONITOR CORPORATION

PROMECON

Absolute Measurement

- Independent
- Repeatable
- Individual
- Accurate

Absolute Coal Flow Measurement

- Output from each pipe not dependent on other pipes, primary air, or other variables.
- Output not dependent on coal feeder information.
- No coal sampling required to yield relative flow distribution.
- Output is directly proportionate to coal flow in each pipe.

Scaled Mass Flow

- Only need to apply a scaling factor to absolute output.
- Scaling factor may be obtained from gravimetric feed rate input, or manual sampling of a single coal pipe.

Pf-FLO Sensor Installation

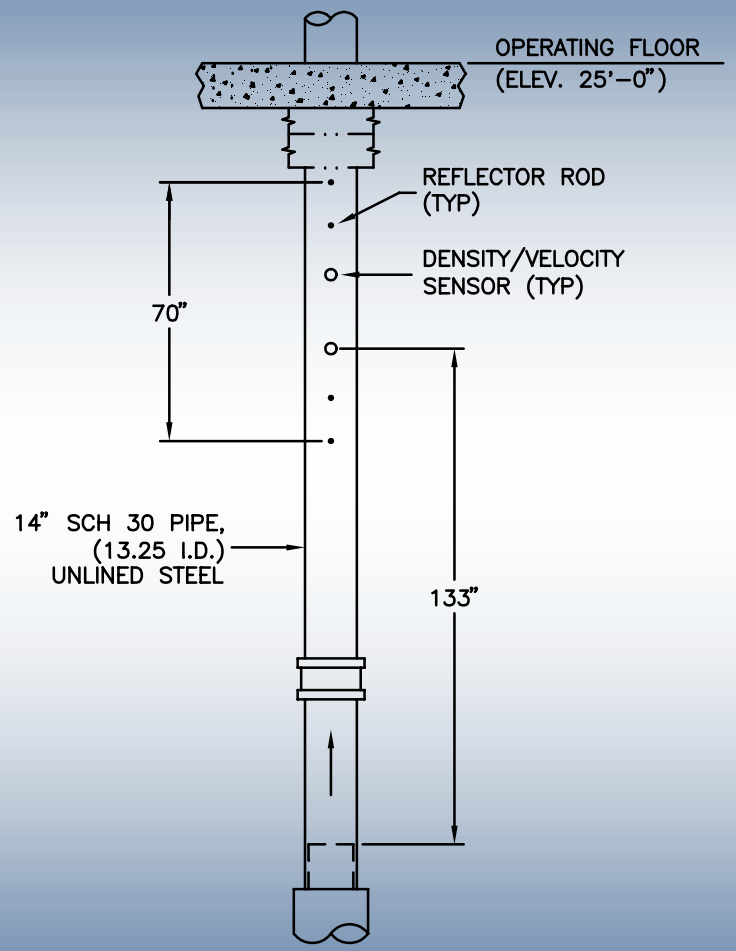

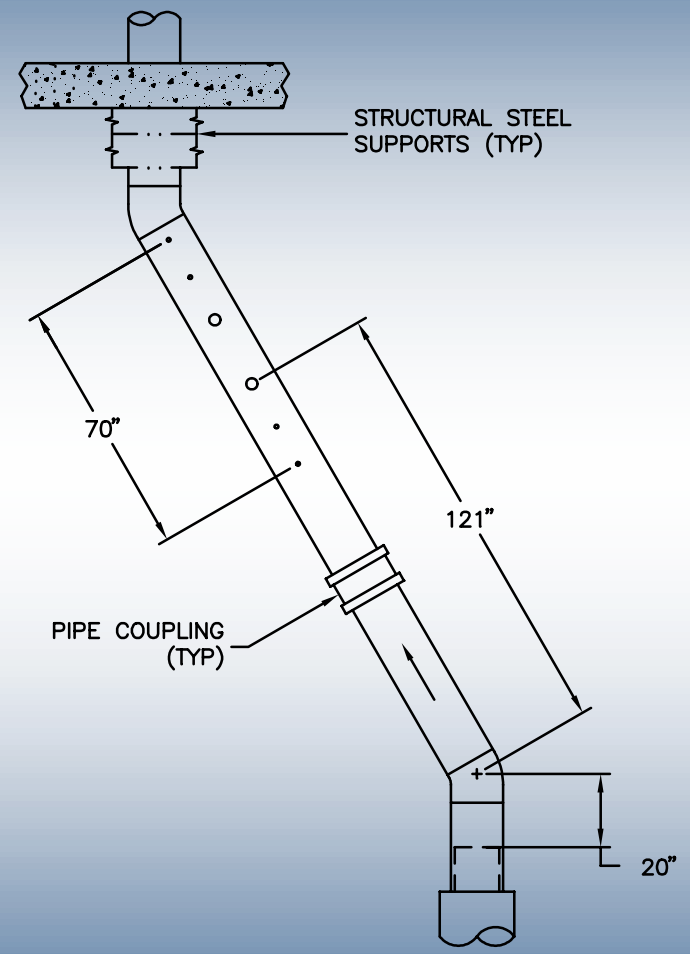

AIR MONITOR CORPORATION

PROMECON

Burner Arrangement

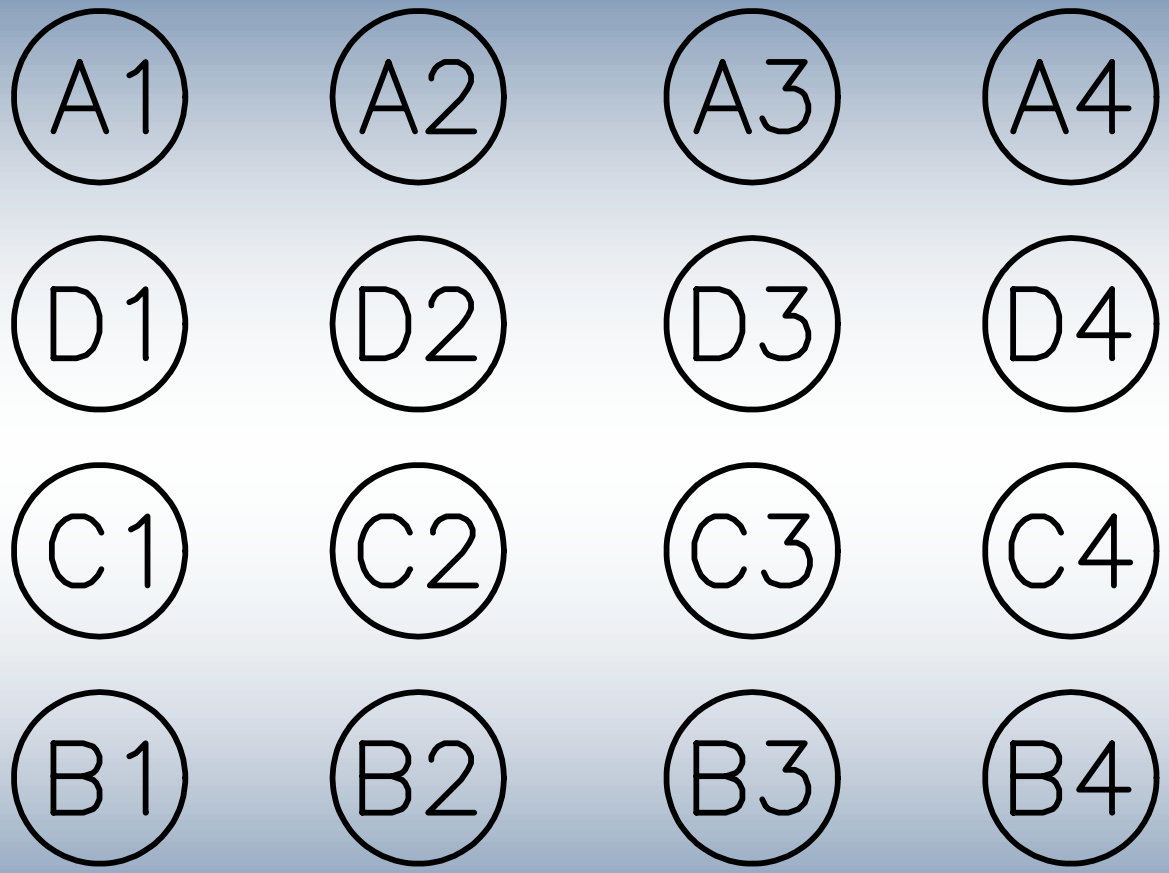

Baseline Air and Coal Data

Date: 7/24/01
Time: 10:30 PM
Load: 165 MW

O_2 Grid:	2.40	%	3.65	%	4.66	%	`4.59	%
	A1		A2		A3		A4	
Air Flow:	84078	lb/hr	89280	lb/hr	83115	lb/hr	80965	lb/hr
Fuel Flow:	6690	a.u.	5170	a.u.	6560	a.u.	7015	a.u.
Air / Fuel	12.57		17.27		12.67		11.54	
	D1		D2		D3		D4	
Air Flow:	83719	lb/hr	78715	lb/hr	73614	lb/hr	90834	lb/hr
Fuel Flow:	5005	a.u.	4550	a.u.	4800	a.u.	4625	a.u.
Air / Fuel	16.73		17.30		15.34		19.64	
	C1		C2		C3		C4	
Air Flow:	94041	lb/hr	103786	lb/hr	94041	lb/hr	91023	lb/hr
Fuel Flow:	5585	a.u.	5445	a.u.	5705	a.u.	4265	a.u.
Air / Fuel	16.84		19.06		16.48		21.34	
	B1		B2		B3		B4	
Air Flow:	66650	lb/hr	75626	lb/hr	66729	lb/hr	73563	lb/hr
Fuel Flow:	5715	a.u.	7020	a.u.	8260	a.u.	5790	a.u.
Air / Fuel	11.66		10.77		8.08		12.71	

Data After Balancing Fuel/Air

Date: 7/25/01
Time: 1:30 AM
Load: 165 MW

O_2 Grid:	3.92	%	4.15	%	4.26	%	4.05	%
	A1		A2		A3		A4	
Air Flow:	95836	lb/hr	87396	lb/hr	87162	lb/hr	89076	lb/hr
Fuel Flow:	6300	a.u.	5000	a.u.	6030	a.u.	6750	a.u.
Air / Fuel	15.21		17.48		14.45		13.20	
	D1		D2		D3		D4	
Air Flow:	87485	lb/hr	77522	lb/hr	77827	lb/hr	89280	lb/hr
Fuel Flow:	6070	a.u.	4980	a.u.	5390	a.u.	5310	a.u.
Air / Fuel	14.41		15.57		14.44		16.81	
	C1		C2		C3		C4	
Air Flow:	97578	lb/hr	106969	lb/hr	97294	lb/hr	72906	lb/hr
Fuel Flow:	5600	a.u.	6510	a.u.	7260	a.u.	5040	a.u.
Air / Fuel	17.42		16.43		13.40		14.47	
	B1		B2		B3		B4	
Air Flow:	73388	lb/hr	75175	lb/hr	61599	lb/hr	77610	lb/hr
Fuel Flow:	5680	a.u.	6750	a.u.	7720	a.u.	7070	a.u.
Air / Fuel	12.92		11.14		7.98		10.98	

NO_x Reduction BaselineData

Date: 9/12/01
Time: 10:00 AM
Load 162 MW

O_2 Grid:		3.80	%	4.52	%	5.20	%	4.42	%	4.48	%			
		A1		A2		A3		A4		A – TOTAL				
Air Flow:		105643	lb/hr	94368	lb/hr	93648	lb/hr	90460	lb/hr	384119	lb/hr			
Fuel Flow:		8290	a.u.	6080	a.u.	8050	a.u.	5660	a.u.	28080	a.u.			
Air / Fuel		12.74		15.52		11.63		15.98		13.67				
PA Signal	4060													
Feeder Signal	46960													
		D1		D2		D3		D4		D – TOTAL				
Air Flow:		87485	lb/hr	76349	lb/hr	85601	lb/hr	89139	lb/hr	338574	lb/hr			
Fuel Flow:		6080	a.u.	4500	a.u.	5540	a.u.	5070	a.u.	21190	a.u.			
Air / Fuel		14.39		16.97		15.45		17.58		15.97				
PA Signal	4209													
Feeder Signal	45740													
		C1		C2		C3		C4		C – TOTAL				
Air Flow:		89076	lb/hr	104106	lb/hr	84707	lb/hr	92792	lb/hr	370681	lb/hr			
Fuel Flow:		5750	a.u.	5320	a.u.	5280	a.u.	2580	a.u.	18930	a.u.			
Air / Fuel		15.49		19.57		16.04		35.97		19.58				
PA Signal	4811													
Feeder Signal	45820													
		B1		B2		B3		B4		B – TOTAL				
Air Flow:		64880	lb/hr	73191	lb/hr	66797	lb/hr	77788	lb/hr	282656	lb/hr			
Fuel Flow:		5830	a.u.	6190	a.u.	6580	a.u.	5060	a.u.	23660	a.u.			
Air / Fuel		11.13		11.82		10.15		15.37		11.94				
PA Signal	5038													
Feeder Signal	43470													
Column Average	Air Flow	347085	lb/hr	348015	lb/hr	330753	lb/hr	350179	lb/hr	1376032	lb/hr			
Column Average	Fuel Flow	25950	a.u.	22090	a.u.	25450	a.u.	18370	a.u.	91860	a.u.			
Column Average	Air / Fuel	13.38		15.75		13.00		19.06		14.97				

AIR MONITOR CORPORATION

PROMECON

After Staging - Reduced NOx Data

Date: 9/12/01
Time: 10:00 AM
Load 160 MW

O_2 Grid:		4.06	%	4.79	%	4.52	%	3.04	%	4.10	%
		A1		A2		A3		A4		A – TOTAL	
Air Flow:		102534	lb/hr	75764	lb/hr	91733	lb/hr	94466	lb/hr	364497	lb/hr
Fuel Flow:		7850	a.u.	4800	a.u.	6380	a.u.	4840	a.u.	23870	a.u.
Air / Fuel		13.06		15.78		14.38		19.52		15.27	
PA Signal	4182										
Feeder Signal	3723										
		D1		D2		D3		D4		D – TOTAL	
Air Flow:		87485	lb/hr	71185	lb/hr	83749	lb/hr	69511	lb/hr	311930	lb/hr
Fuel Flow:		5780	a.u.	4530	a.u.	5530	a.u.	5470	a.u.	21310	a.u.
Air / Fuel		15.14		15.71		15.14		12.71		14.63	
PA Signal	4190										
Feeder Signal	4676										
		C1		C2		C3		C4		C – TOTAL	
Air Flow:		83115	lb/hr	71187	lb/hr	87162	lb/hr	58327	lb/hr	299791	lb/hr
Fuel Flow:		6350	a.u.	6070	a.u.	6280	a.u.	3320	a.u.	22020	a.u.
Air / Fuel		13.09		11.73		13.88		17.57		13.61	
PA Signal	4932										
Feeder Signal	5576										
		B1		B2		B3		B4		B – TOTAL	
Air Flow:		81442	lb/hr	68979	lb/hr	59098	lb/hr	65858	lb/hr	275376	lb/hr
Fuel Flow:		5930	a.u.	6730	a.u.	7240	a.u.	5430	a.u.	25330	a.u.
Air / Fuel		13.73		10.25		8.16		12.13		10.87	
PA Signal	5007										
Feeder Signal	4637										
Column Average	Air Flow	354576	lb/hr	287115	lb/hr	321742	lb/hr	288162	lb/hr	1251595	lb/hr
Column Average	Fuel Flow	25910	a.u.	22130	a.u.	25430	a.u.	19060	a.u.	92530	a.u.
Column Average	Air / Fuel	13.68		12.97		12.65		15.12		13.52	

AIR MONITOR CORPORATION

PROMECON

Recorded NOx During Testing

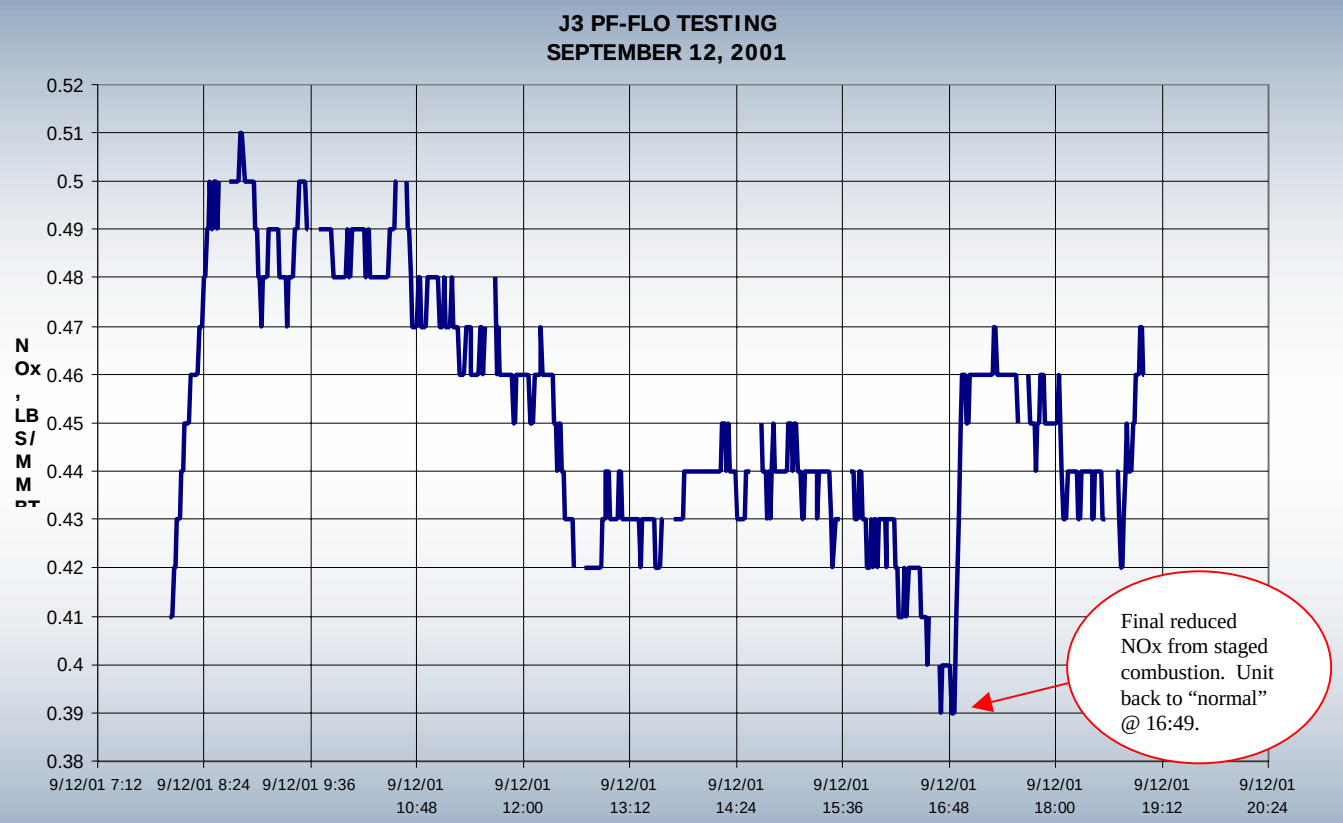

AIR MONITOR CORPORATION

PROMECON

LOI as Sampled During Test Period

	Loss on Ignition, % Hopper Designation / Sample					
	1	2	3	4	5	AVG
Full Load As-Found	8.5	8.7	9.2	11.0	9.3	9.3
Full Load After	8.1	8.0	10.4	9.4	6.7	8.5
LOI Change	– 0.4	– 0.7	+1.2	– 1.6	– 2.6	– 0.8

Conclusions

- The use of individual burner air and fuel flow measurement can be used to:
  - Reduce overall NO_x levels: 18.7% decrease (from .48 to .39 lb/MMBtu).
  - Improve/flatten NO_x and O_2 profiles.
  - Reduce overall O_2 levels.
  - Improve heat rate.
  - Reduce LOI: .8% reduction while simultaneously reducing NOx by 18.7%.
  - Adjust feeder rate curves for better mill balance.

What's Ahead?

- Santee Cooper management would like to reduce overall unburned carbon from current levels (up to 14%) to consistently be under 10% for a new ash market.
- Adjustable coal valves have been installed on unit 4 at mill outlet.
- Rather than adjust burner airflow to pipe coal flow, we will adjust burner line coal flows.
- Recent work has shown us that balancing coal pipes will dramatically reduce unburned carbon.

What's Ahead?

- Santee Cooper management would like to reduce overall unburned carbon from current levels (up to 14%) to consistently be under 10% for a new ash market.
- Adjustable coal valves have been installed on unit 4 at mill outlet.
- Rather than adjust burner airflow to pipe coal flow, we will adjust burner line coal flows.
- Recent work has shown us that balancing coal pipes will dramatically reduce unburned carbon.

Coal Pipe Balancing Example

dicates % deviation from Mill average n

BALANCE DATA
Cabinet 1

	PIPE	EER Valve Setting	###### 6:42 to 9;00	EER Valve Setting	###### 18:17 to 21:39	EER Valve Setting	###### 18:37 to 21:51	EER Valve Setting	###### 18:03 to 21:24	EER Valve Setting	###### 10:27 to 13:33	EER Valve Setting	###### 8:52 to 12:14	EER Valve Setting	###### 14:16 to 17:36	EER Valve Setting	###### 11;46 to 15:08	EER Valve Setting	###### 11:19 to 13:57	###### 14:41 to 18:03	###### 7:30 to 10:52
Mill A	13A1	7.5	2.56		-1.12		-1.58		-0.93		-1.38		-1.55		-0.17		-2.03		-0.93	-2.13	-1.23
	15A2	4.0	5.86		5.15		4.77		3.66		4.43		3.79		2.20		3.33		2.51	3.63	3.57
	17A3	3.0	-8.41	4.0	-4.03	4.5	-3.20	5.0	-2.73		-3.05		-2.24		-2.04		1.30		-1.58	-1.49	-2.34
	FEEDER		6406		6611		6283		6605		6463		6405		6418		7149		6548	6266	6748
	PA		7080		7203		7010		7207		7121		7082		6885		7531		7163	6998	7286
	Feeder/PA		0.90		0.92		0.90		0.92		0.91		0.90		0.93		0.95		0.91	0.90	0.93
Mill B	14B1	6.9	-1.23		-1.96		-2.51		0.79		0.49		0.31		1.24		-0.69		0.24	1.05	0.38
	16B3	4.0	0.95		2.33		1.04		-3.32		-2.31		-1.15		-2.67		-0.09		-2.65	-2.02	-0.19
	19B2	7.8	0.28		-0.38		1.47		2.50		1.82		0.85		1.42		0.78		2.41	0.96	-0.19
	FEEDER		6038		6193		5784		6172		6287		6197		5943		7036		6320	5973	6581
	PA		7005		7089		6964		7153		7209		7007		6883		7581		7228	7063	7353
	Feeder/PA		0.86		0.87		0.83		0.86		0.87		0.88		0.86		0.93		0.87	0.85	0.90
Mill C	8C3	7.8	9.19		15.45	5.0	8.14		2.15	4.0	2.97		0.75		4.66		-2.60		-0.31	0.91	-0.15
	9C1	5.0	-6.53	6.0	-15.18		-11.89	7.8	-8.85		-10.03		1.01		-4.47		2.77		-0.57	-1.81	4.62
	10C2	5.0	-2.66		-0.27		3.75		6.70		7.06	4.0	-1.76		-0.18		-0.16		0.87	0.9	-4.47
	FEEDER		5923		5908		5871		6045		5853		5965		5596		6645		6241	5934	6391
	PA		6787		6785		6773		6875		6596		6615		6395		7226		6839	6669	6944
	Feeder/PA		0.87		0.87		0.87		0.88		0.89		0.90		0.88		0.92		0.91	0.89	0.92
Mill D	1D1	4.0	-3.25	5.0	-1.63		-2.59	6.0	-2.54	7.8	-7.37		-14.30		-12.25		0.48		1.86	-3.3	-5.60
	3D2	7.8	-5.65		-5.42		-4.0		-3.26		-7.17		0.30		8.31	4	7.12	3.5	-2.28	3.48	5.15
	5D3	3.5	8.90		7.05	3.0	6.59		5.80		14.54	2.5	14.00	1.5	3.94		-7.61		0.42	-0.17	0.45
	FEEDER		6071		6168		5961		6243		6026		5941		5686		6572		6062	5774	6259
	PA		6888		6945		6819		6989		6786		6487		6336		7135		6827	6650	6941
	Feeder/PA		0.88		0.89		0.87		0.89		0.89		0.92		0.90		0.92		0.89	0.87	0.90

Coal Pipe Balancing Example

ndicates % deviation from Mill average m

BALANCE DATA

Cabinet 2

	PIPE	EER Valve Setting	###### 1:16 to 4:31	EER Valve Setting	###### 14:15 to 17:00	EER Valve Setting	###### 2:01 to 5:16	EER Valve Setting	###### 18:31 to 21:31	EER Valve Setting	###### 9:17 to 22:17	EER Valve Setting	###### 8:30 to 11:46	EER Valve Setting	###### 13:25 to 16:40	EER Valve Setting	###### 9:28 to 12:10	###### 12:10 to 15:07	###### 7:40 to 10:55
Mill E	2E1	3.0	-11.77		-7.86	3.5	-10.53		1.05		-1.99		-2.85		0.98		0.49	-0.90	1.66
	4E3	4.0	22.54	3.0	14.83		17.74	2.5	0.15		5.94		7.05	2.0	0.57		2.32	3.03	1.73
	7E2	7.8	-10.78		-6.96		-7.21		-1.20		-3.95		-4.20		-1.56		-2.81	-2.13	-3.39
	FEEDER		6387		6117		5450		6531		6243		6349		7260		6828	6428	6612
	PA		7083		6912		6515		7168		6993		7190		7458		7158	6948	7199
	Feeder/PA		0.90		0.88		0.84		0.91		0.89		0.88		0.97		0.95	0.93	0.92
Mill F	6F1	7.25	-8.99		-7.10		-3.97	7.8	-4.40		-1.86		-2.28		0.28		-3.57	-3.43	-3.79
	11F2	3.5	5.82	3.0	4.52	2.5	3.46		2.15		2.77		3.26		1.14		0.50	2.64	-1.65
	12F3	3.5	3.16		2.58		0.52		2.08		-0.91		-0.98		-1.43		3.07	0.78	5.44
	FEEDER		6135		6114		5157		6219		6141		6221		7080		6650	6245	6801
	PA		6918		6905		6324		6968		6922		6970		7390		7130	6887	7221
	Feeder/PA		0.89		0.89		0.82		0.89		0.89		0.89		0.96		0.93	0.91	0.94
Mill G	20G3	7.8	7.80	4.0 / 7.3	3.80		6.23		4.75		5.00		1.77		1.81		1.87	2.54	5.13
	21G1	4.0	-2.10		0.00		-1.41		-1.25		-0.32		-4.47		2.30		-1.44	-1.23	0.60
	22G2	7.8	-5.70		-3.83		-4.83		-3.51		-4.67		2.70		-4.11		0.43	-1.31	-5.73
	FEEDER		5585		5789		5206		6189		6030		5961		6943		6584	6152	6397
	PA		6585		6714		6359		6953		6856		6812		7307		7088	6826	7009
	Feeder/PA		0.85		0.86		0.82		0.89		0.88		0.88		0.95		0.93	0.90	0.91
Mill H	18H1	2.5	8.14	2.0	4.48		3.86		7.78	1.5	3.44		3.59		3.64		4.03	2.89	2.44
	23H2	7.8	2.59		5.75	5.0	5.71	4.5	1.65		4.16	4.0	3.11		3.81	3.5	1.69	1.21	1.92
	24H3	7.8	-10.73		-10.23		-9.57		-9.44		-7.62		-6.70		-7.45		-5.72	-4.10	-4.37
	FEEDER		5893		5657		5004		5984		5987		5541		6252		6007	5586	5957
	PA		6778		6635		6239		6831		6621		6268		6996		6846	6594	6818
	Feeder/PA		0.87		0.85		0.80		0.88		0.90		0.88		0.89		0.88	0.85	0.87

Air Monitor Corporation

PROMECON

Unburned Carbon Improvement

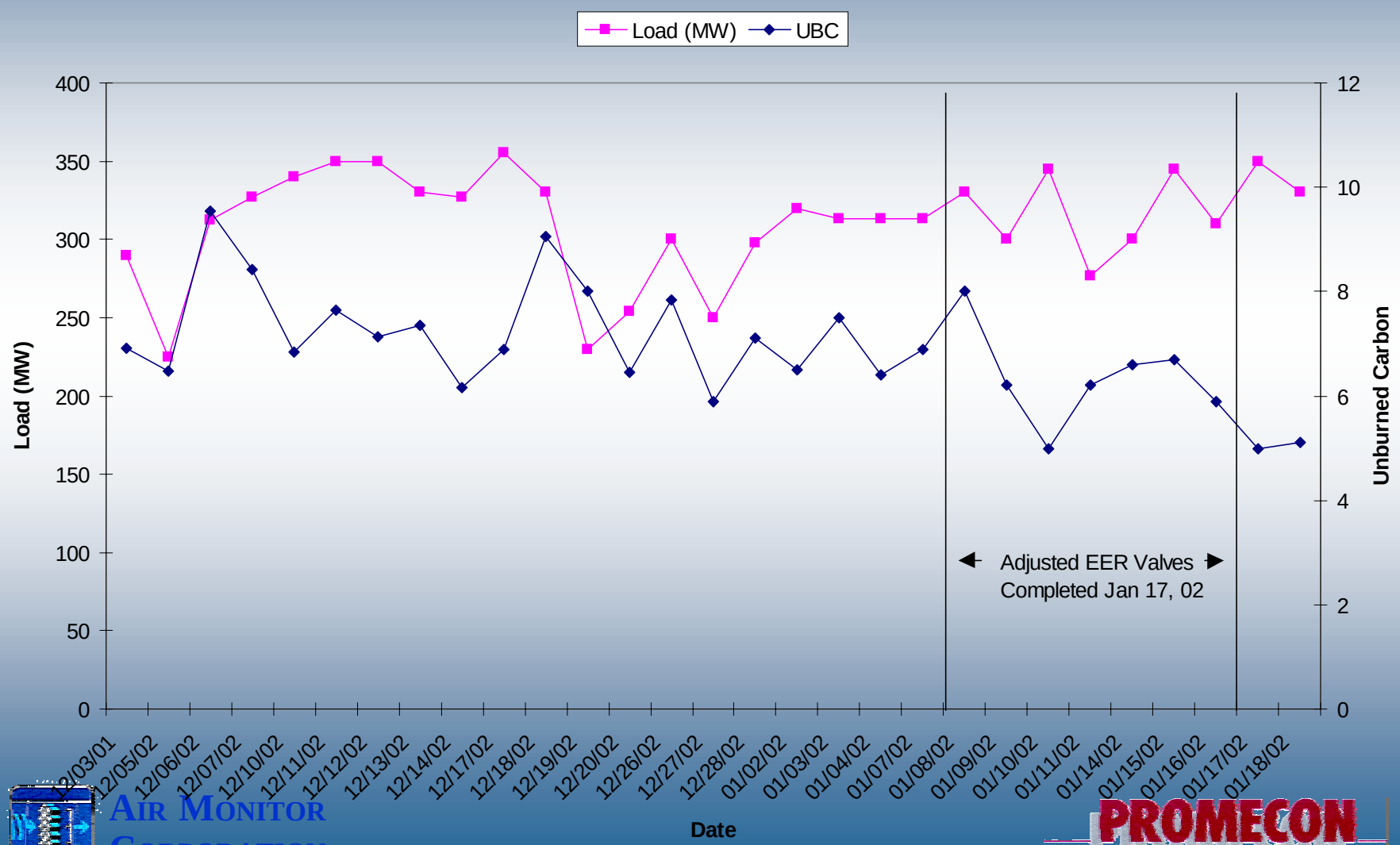

Air Monitor Corporation

PROMECON

Further Benefits - Mill Balancing

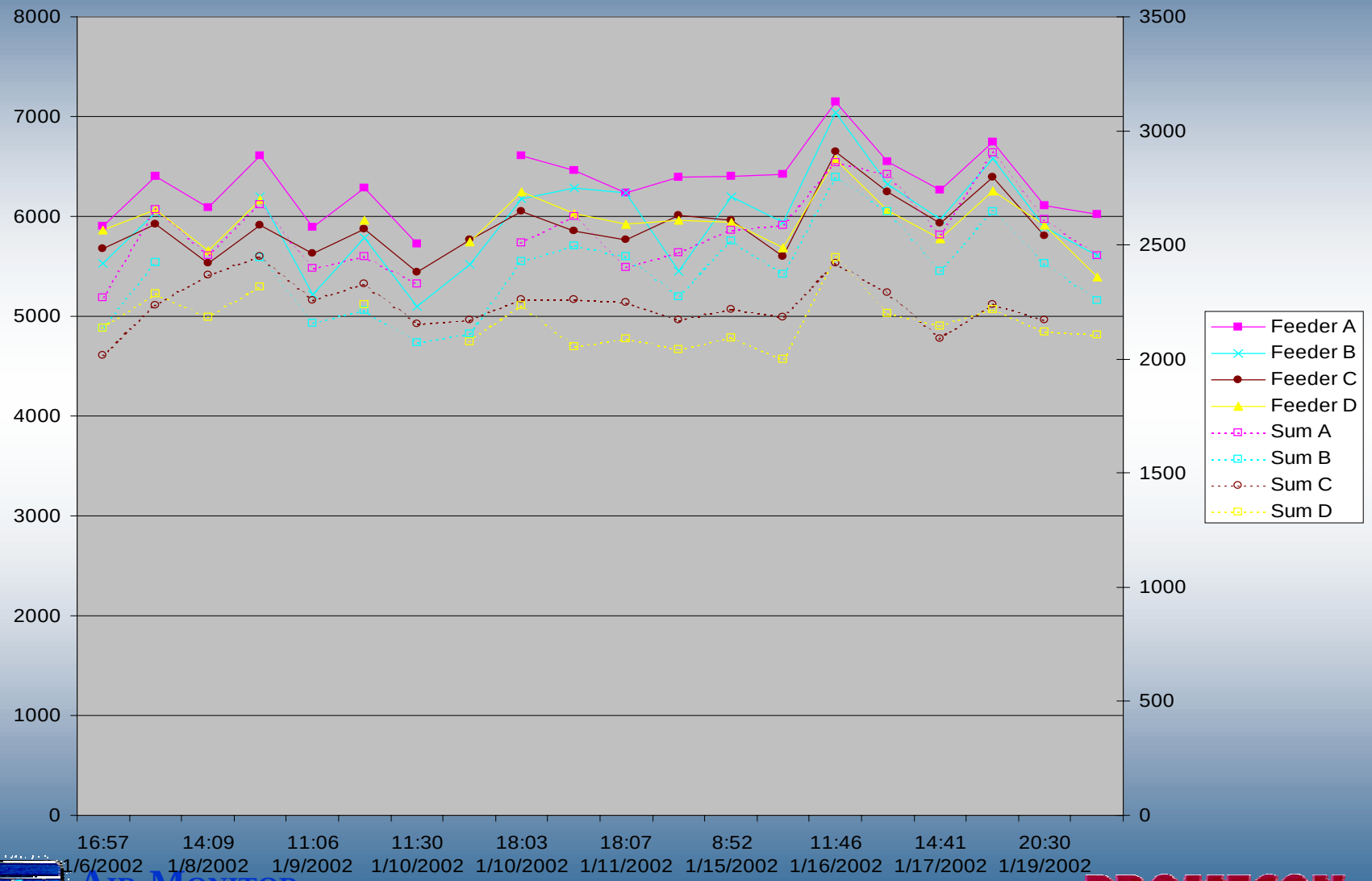

AIR MONITOR CORPORATION

PROMECON