Reprinted with permission from CEP (Chemical Engineering Progress, April 2009. Copyright © 2009 American Institute of Chemical Engineers.

Capturing Carbon from Existing Coal-Fired Power Plants

Jared P. Ciferno
Timothy E. Fout
U.S. Dept. of Energy, National Energy Technology Laboratory
Andrew P. Jones
James T. Murphy
Science Applications International Corp.

DOE's National Energy Technology Laboratory is spearheading R&D on a variety of post-combustion and oxy-combustion technologies to cost-effectively achieve 90% CO_2 capture.

Coal-fired power plants generate about half of the electricity in the United States today, and will continue to be a major source of energy for the foreseeable future. The U.S. Dept. of Energy's (DOE) Energy Information Administration (EIA) projects that the nation's 300+ gigawatts (GW) of coal-fired electricity-generating capacity currently in operation will increase to more than 400 GW by 2030 (*1*).

However, electricity production from fossil-fuel-based power plants will be challenged by growing concerns that anthropogenic emissions of greenhouse gases (GHG), such as carbon dioxide, are contributing to global climate change. The existing fleet of coal-fired power plants emits about 2 billion tons of CO_2 annually, accounting for roughly two-thirds of the total CO_2 emissions from the U.S. power sector. Moreover, as shown in Figure 1, more than 90% of the CO_2 emissions expected to be emitted from coal-fired plants from 2007 through 2030 will originate from today's existing coal-fired power plants, since less than 4 GW of capacity is likely to be retired during that period (*1*).

Carbon dioxide emissions could be regulated in the near future to address climate change. Recognizing that current CO_2-capture technology is not cost-effective and has not been demonstrated at scale, DOE's National Energy Technology Laboratory (DOE/NETL) has initiated a research and development program directed specifically at post- and oxy-combustion CO_2-capture technologies that can be retrofitted to existing coal-fired power plants, as well designed into new plants. The goal of this effort, which is being carried out as part of the Existing Plants, Emissions and Capture (EPEC) Program, is to develop advanced CO_2-capture and compression technologies for both existing and new coal-fired power plants that, when combined, can achieve 90% CO_2 capture while limiting the increase in cost of electricity (COE) to no more than 35%. This aggressive R&D plan aims to develop multiple CO_2-capture options capable of meeting the cost and performance targets at a commercial scale by 2020.

A diverse technological portfolio will be necessary to stabilize global GHG emissions (*2*), including carbon capture and storage (CCS) as an option for directly reducing CO_2 emissions from coal-fired power plants. Under an integrated CCS concept, CO_2 would be captured, compressed, transported via pipeline, and permanently stored and monitored in geologic formations, such as depleted oil and gas fields, saline formations, and unmineable coal seams (*3*).

DOE/NETL has been working to advance all aspects of CCS systems for more than a decade (*4*). This article focuses primarily on the CO_2 capture R&D tailored for the existing fleet.

CCS basics

The two general approaches to reducing carbon emissions from existing plants are post-combustion capture and oxy-combustion.

Post-combustion CO_2 capture, or separation of CO_2 produced by conventional coal combustion in air, presents several technical challenges. The fluegas is at atmospheric pressure and the CO_2 concentration is 10–15 vol.%, which results in a low CO_2 partial pressure and a large volume of gas to be treated. Despite this difficulty, post-combustion CO_2 capture offers the greatest near-term potential for reducing GHG emissions, because it can be retrofit to existing units and can also be tuned for various levels of CO_2 capture, which may accelerate market acceptance.

Chemical processes for separating CO_2 from existing power-plant fluegas streams, such as amine-based scrubbing with an aqueous monoethanolamine (MEA) solution (Figure 2), are capable of achieving high levels of CO_2 capture (90% or more) from fluegas due to fast kinetics and strong chemical reactions. However, off-the-shelf amine solvents are corrosive and susceptible to degradation by trace fluegas constituents (particularly sulfur oxides [SO_X]). They also require significant amounts of energy, in the form of low-pressure steam, for sensible heating, heat of reaction, and stripping to regenerate the liquid solvent for reuse.

DOE/NETL has estimated that MEA-based CCS will increase the COE for a new pulverized coal (PC) plant by about 80–85%, and even more for retrofits, while reducing the power plant's net efficiency by about 30% (*5*, *6*). And although MEA-based scrubbing has been utilized for more than 60 years for natural gas purification and food-grade CO_2 production, it has not been demonstrated at the larger scale necessary for 90% CO_2 capture at a 500-MW coal-fired power plant where 10,000–15,000 tons of CO_2 would be removed per day.

With the potential of large-scale power plant CO_2 mitigation on the horizon, technology developers, such as Fluor Corp. (Econamine FG Plus) and Mitsubishi Heavy Industries (KM-CDR Process), have begun to optimize chemical scrubbing technology (*7*, *8*). The modifications are focused primarily on extensive thermal integration of the CO_2-capture system with the power plant and development of improved solvent formulations with lower stripping steam requirements and lower solvent circulation rates than MEA (*9*). These process improvements have the potential to reduce the cost and energy intensity of post-combustion CO_2 capture, which is estimated to account for about three-fourths of the total cost of an integrated CCS system.

PC oxy-combustion power plants are designed to utilize high-purity oxygen mixed with recycled fluegas (primarily CO_2) to combust coal and produce a highly concentrated CO_2 stream (more than 60% by volume). The CO_2 is further purified by condensing the water vapor through the use of cooling, desiccant systems, and compression to a dew point of –40°F. Depending on the end-use and pipeline specification, additional treatment may be necessary to reduce other gas constituents (O_2, SO_X and nitrogen oxides [NO_X]).

Although PC oxy-combustion is a relatively new concept and experience with integrated systems is limited, most key process components, including the cryogenic air separation unit (ASU) for O_2 production, are proven and commercially available. PC oxy-combustion is currently being evaluated at the 30-megawatt thermal (MW_{th}) scale by Babcock & Wilcox Co. (B&W) in Alliance, OH, and Vattenfall at Schware Pumpe in Germany (*10*, *11*).

However, the appeal of oxy-combustion is tempered by a few key challenges, namely the capital cost and energy consumption for cryogenic ASU operation, boiler air infiltration that dilutes the fluegas with nitrogen, and excess O_2 contained

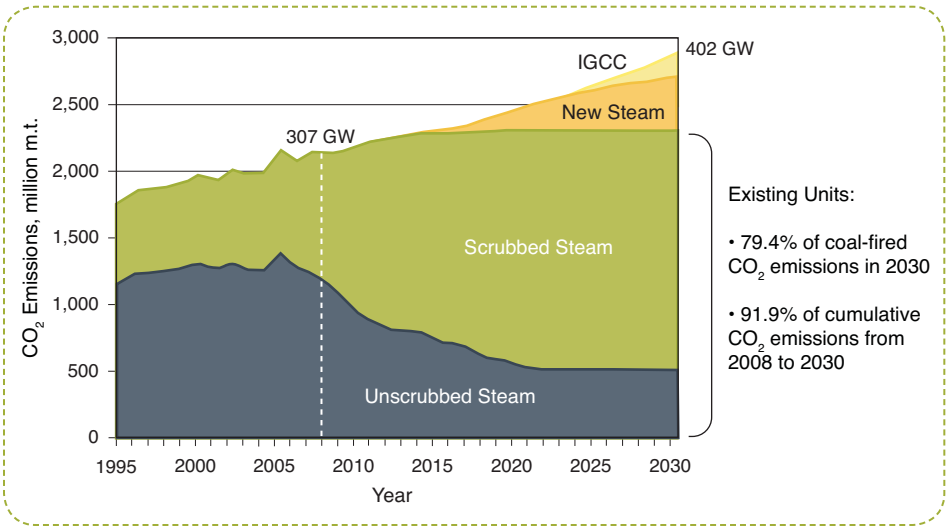

Figure 1. Projections of carbon dioxide emissions from U.S. coal-fired electric power generation. Source: *(1)*.

in the concentrated CO_2 stream. Fluegas recycle (about 70–80%) is also necessary to approximate the combustion characteristics of air, since currently available boiler materials cannot withstand the high temperatures resulting from coal combustion in pure O_2 (*12*).

Consequently, the economic benefit of oxy-combustion compared to amine-based scrubbing systems is limited. In comparison to a supercritical PC plant without CCS, a new oxy-fired supercritical PC plant would incur an estimated 60% increase in the COE (*6*).

Given the significant economic penalties associated with current CO_2-capture technologies, step-change improvements in both cost and energy efficiency will be required to ensure that CCS for existing plants can be done with economically acceptable costs and impacts.

The EPEC R&D program

The EPEC program is conducting R&D on advanced post- and oxy-combustion CO_2-capture technologies, as well as novel CO_2 compression techniques, for existing coal-fired power plants. In addition to funding external projects, DOE/NETL, through its Office of Research and Development (ORD), also conducts in-house research to develop innovative concepts for CO_2 capture that could lead to dramatic cost and performance improvements relative to today's technologies. The EPEC program also sponsors systems analysis studies of the cost and performance of CO_2-capture technologies (*5*, *6*).

In July 2008, DOE/NETL awarded 15 new cooperative agreements focused on laboratory- through pilot-scale post- and oxy-combustion CO_2-capture R&D projects. These projects (denoted by an asterisk in Table 1) build on the current portfolio of CO_2-capture research and focus on five technology pathways: membranes, solvents, and sorbents for post-combustion CO_2 capture, oxy-combustion (fluegas purification and boiler development), and chemical looping combustion (CLC).

Membranes

Membrane-based CO_2 capture uses permeable or semi-permeable materials that allow for the selective transport and separation of CO_2 from fluegas. Gas separation is accomplished by some physical or chemical interaction between the membrane and the gas being separated, causing one component in the gas to permeate through the membrane faster than another. In general, membrane processes offer several potential advantages: they operate passively, with no moving parts; they can be designed to withstand chemical contaminants (SO_X, NO_X); they are energy-efficient, with low operating costs; and they are modular and have a small footprint.

Although membranes are best suited for separating CO_2 in high-pressure applications, such as coal gasification, the EPEC Program is focused on developing highly selective and permeable membrane systems designed specifically for CO_2 separation from low-partial-pressure fluegas streams. For instance, gas absorption membranes, where separation is achieved by a hybrid system that combines a membrane with an absorption liquid (*e.g.*, amine solvent or enzymes) to selectively remove CO_2 from the fluegas stream (Figure 3), are a promising retrofit technology.

Membrane Technology and Research (MTR) is investigating thin-film, composite polymer membranes and associated process configurations to increase the flux of CO_2 across the membrane, thereby reducing the required membrane area. A novel countercurrent design that is being pursued uses a portion of the incoming combustion air as a sweep gas to maximize the driving force for membrane permeation. Preliminary results indicate that 90% CO_2 capture at a 600-MW coal-fired power plant will require about 700,000 m^2 of membrane, or 135 of MTR's nested module skids with a total footprint of about 0.5 acres (*13*).

Another membrane process, under development by Carbozyme, leverages the carbonic anhydrase (CA)

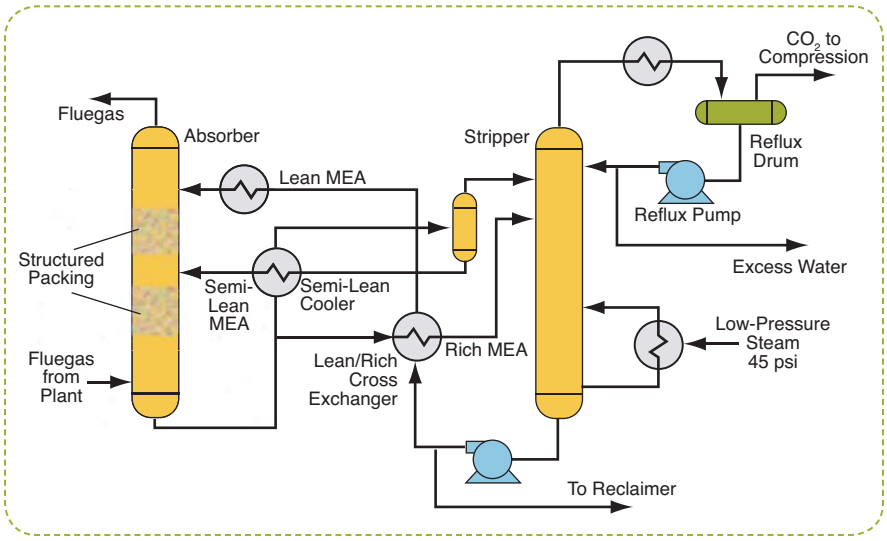

▶ **Figure 2.** Amine-based chemical scrubbing can achieve high levels of CO_2 capture.

Table 1. Current CO_2-capture technology R&D projects.

Project Focus	Participant
Post-Combustion Membranes	
Biomimetic Membrane	Carbozyme, Inc.
CO_2 Membrane Process*	Research Triangle Institute
Membrane Process for CO_2 Capture*	Membrane Technology and Research
Novel Dual-Functional Membrane	Univ. of New Mexico
Novel Polymer Membranes	Membrane Technology and Research
Electrochemical Membranes	DOE/NETL's ORD
Post-Combustion Solvents	
High-Capacity Oligomers*	GE Global Research
Integrated Vacuum Carbonate Absorption Process*	Illinois State Geological Survey
Phase Transitional Absorption	Hampton Univ.
Ionic Liquids	Univ. of Notre Dame
Reversible Ionic Liquids*	Georgia Tech Research Corp.
Post-Combustion Sorbents	
Amine-Grafted Zeolites	Univ. of Akron
Dry Carbonate Process	Research Triangle Institute
Low-Cost CO_2 Sorbent*	TDA Research
Metal Organic Frameworks	UOP LLC
Carbon Sorbents*	SRI International
Solid Sorbents*	ADA-ES, Inc.
Reactor Design Studies	DOE/NETL's ORD
Carbon-Supported Amine Sorbents	DOE/NETL's ORD
Supported Amine Sorbent Modeling	DOE/NETL's ORD
CO_2 Capture Sorbent-Based Device Simulation	DOE/NETL's ORD
Surface Immobilization Nanotechnology for Sorbents	DOE/NETL's ORD
CO_2 Sorbent Development	DOE/NETL's ORD
O_2 Supply	
Oxygen Transport Membrane-Based Oxy-Combustion	Praxair, inc.
Compression	
Novel Concepts for CO Compression	Southwest Ressearch Institute
Supersonic Shock Wave Compression Technology	Ramgen Power Systems
Oxy-Combustion	
PC Oxy-Combustion Pilot Testing	Babcock & Wilcox
Oxy-Combustion Impacts in Existing Coal-Fired Boilers*	Reaction Engineering International
Oxy-Combustion Boiler Development for Tangential Firing*	Alstom Power
Oxy-Combustion Boiler Material Development*	Foster Wheeler NA Corp.
Oxy-Combustion CO_2 Recycle Retrofit	Southern Research Institute
Pilot-Scale Oxy-Fuel Research	Canada Centre for Mineral and Energy Technology (CANMET)
PC Oxy-Combustion with Integrated Pollutant Removal	Jupiter Oxygen Corp.
Evaluation of CO_2 Capture/Utilization/Disposal Options	Argonne National Laboratory
Fluegas Purification using SOx/NOx Reactions During CO_2 Compression*	Air Products and Chemicals, Inc.
Near-Zero Emissions Oxy-Combustion Fluegas Purification*	Praxair, Inc.
Oxy-Combustion with CO_2 Capture	DOE/NETL's ORD
Oxy-Fired Combustion Simulation	DOE/NETL's ORD
Materials Performance in Oxy-Combustion Environments	DOE/NETL's ORD
Oxy-Fuel Flame Property Measurement	DOE/NETL's ORD
Wireless Sensing in Oxy-Fuel Environments	DOE/NETL's ORD
Chemical Looping Combustion (CLC)	
CLC Prototype*	Alstom Power, Inc.
Coal Direct Chemical Looping*	Ohio State Univ.
CLC Oxygen Carrier Studies	DOE/NETL's ORD
CLC Model Development	DOE/NETL's ORD
Laboratory-Scale CLC Combustor	DOE/NETL's ORD
Design and Control of CLC Systems	DOE/NETL's ORD
**** New projects announced in 2008.***	

enzyme to catalyze the conversion of CO_2 to bicarbonate at the fluegas interface, and reverses the process via a pressure swing at the CO_2 product interface. The Carbozyme permeator consists of two hollow-fiber, microporous membranes separated by a thin liquid membrane. CA is attached to the hollow-fiber wall to ensure that the incoming CO_2 contacts the CA at the gas-liquid interface to maximize conversion efficiency. The CA process has been shown to have a low heat of absorption that reduces the energy penalty typically associated with absorption processes. However, several potential technical limitations need to be better understood, including membrane boundary layers, pore wetting, surface fouling, loss of enzyme activity, long-term operation, and scaleup. The Carbozyme system was validated recently during laboratory-scale testing on a 0.5-m^3 permeator, and 85% removal of CO_2 from a 15.4% CO_2 feed stream was achieved. Upon fabrication, the next-scale permeator will be shipped to the Energy and Environmental Research Center for testing on coal-combustion fluegas (*14*).

The article, "Capturing CO_2: Membrane Systems Move Foward," on pp. 42–47 provides more detail on the development of membranes for CO_2 separation and purification.

Solvents

Solvent-based CO_2 capture involves the chemical or physical sorption of CO_2 from fluegas into a liquid carrier. Although solvent-based scrubbing is currently used commercially to remove CO_2 from industrial fluegases and process gases, it has not been applied to removing large volumes of CO_2, as would be encountered in the fluegas from a coal-fired power plant. Research projects in this pathway address technical challenges to solvent-based CO_2 capture, such as large fluegas volume, relatively low CO_2 concentration, fluegas contaminants, and high parasitic-power demand for solvent recovery.

Chemical solvents. Chemical absorption involves one or more reversible chemical reaction(s) between CO_2 and an aqueous solution of an absorbent, such as an alkanolamine (*e.g.*, MEA), hindered amine, aqueous ammonia, or a carbonate, to form water-soluble compounds. Chemical solvents are able to capture high levels of CO_2 from fluegas streams with a low CO_2 partial pressure due to chemical reactivity, but capacity is equilibrium-limited. Thus, chemical-solvent-based systems incur significant cost and efficiency penalties during the regeneration step, which involves a temperature swing to break the absorbent-CO_2 chemical bond.

DOE/NETL is investigating advanced solvents that have lower regeneration heat duties than MEA as well as resistance to fluegas impurities. Previous research focused on potassium carbonate promoted with piperazine (*15*); future work will evaluate an integrated vacuum carbonate absorption process (*16*) and novel oligomeric solvents.

Physical solvents. Also currently in use in smaller-scale industrial applications, physical absorption is a bulk phenomenon where inorganic or organic liquids preferentially absorb a gaseous species from the gas mixture. Although the regeneration of physical solvents is less energy-intensive than chemical-solvent regeneration, this technology is considered more practical for processing the high-pressure fluegas generated at coal gasification (rather than combustion) plants, since CO_2 solubility in physical solvents increases with partial pressure (*17*).

The Univ. of Notre Dame and Georgia Institute of Technology are investigating a new class of physical solvents designed to capture CO_2 from low-pressure fluegas streams. Ionic liquids (ILs) include a broad category of salts that typically contain an organic cation and either an inorganic or organic anion. ILs have essentially no vapor pressure and are thermally stable at temperatures up to several hundred degrees Centigrade, which minimizes solvent loss during CO_2 separation. Task-specific ILs containing amine functionality have recently been developed with CO_2 solubility 40 times greater than that of earlier ILs. A possible drawback is that the high viscosity of many ILs could adversely affect the ability to pump them in a power plant application (*18*).

Article continues on next page

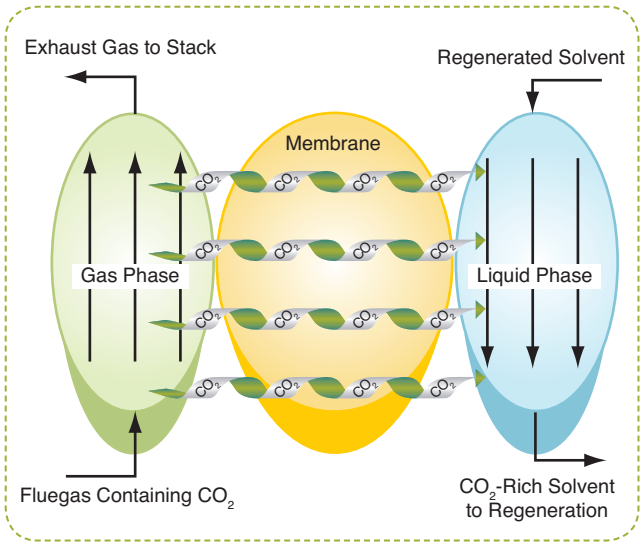

▲ **Figure 3.** A gas absorption membrane combines a membrane with a solvent to selectively remove CO_2 from the fluegas.

Sorbents

Solid sorbents, including sodium and potassium oxides, zeolites, carbonates, amine-enriched sorbents, and metal-organic frameworks, are also being explored for CO_2 capture at existing plants. A temperature swing facilitates sorbent regeneration following chemical and/or physical adsorption, but a key attribute of CO_2 sorbents is that less water is present than in solvent-based systems, thereby reducing the energy requirements for sensible heating and stripping. Possible configurations for contacting the fluegas with the sorbents include fixed, moving, and fluidized beds.

Research projects in this pathway address key technical challenges to sorbent-based systems, such as solids circulation, sorbent attrition, low chemical potential, heat transfer, reactive fluegas contaminants, and the parasitic-power and sweep-gas demand for sorbent regeneration.

Scientists in DOE/NETL's Office of Research and Development (ORD) have developed amine-enriched sorbents that are prepared by treating high-surface-area substrates with various amine compounds. The implanting of the amine on a solid substrate increases the surface contact area of the amine for CO_2 capture, thus reducing sorbent/amine requirements. This advantage, combined with the elimination of a water carrier, has the potential to improve the energy efficiency of the process relative to MEA scrubbing. Concurrently, ORD is evaluating novel reactor designs for large-scale, sorbent-based CO_2-capture systems applicable to new and existing PC power plants (*19*).

Research Triangle Institute (RTI) International is investigating the use of supported sodium carbonate (Na_2CO_3, or soda ash) as an inexpensive and efficient CO_2 sorbent. The Na_2CO_3 reacts with CO_2 and H_2O to form sodium bicarbonate via a reversible reaction that requires a temperature swing from about 60°C to 120°C for sorbent regeneration. RTI's dry carbonate process was successfully integrated into the U.S. Environmental Protection Agency's (EPA) Multi-Pollutant Control Research Facility — a 4-million Btu/h bench-scale furnace. During 105 h of testing with coal-derived fluegas, the process achieved 90% CO_2 capture. It offers four economic advantages over MEA scrubbing: reduced capital costs, lower auxiliary power load, reduced steam-turbine power de-rating, and lower reactive-material costs (*20*).

UOP LLC is leading the effort to develop metal organic frameworks (MOFs) — materials that are thermally stable, have adjustable chemical functionality that can be tailored for high CO_2-adsorption capacity, and possess very high porosity. UOP has developed a virtual high-throughput screening model to reduce the number of MOF synthesis experiments to only those that have the highest probability of success. A wide variety of MOFs have been successfully synthesized, and preliminary results indicate that MOFs are hydrothermally stable and capable of separating CO_2 from simulated fluegas streams (*21*).

Taking the Next Step

Researchers in the DOE/NETL Office of Research and Development developed and patented a novel ammonia-based CO_2-capture technology that relies on a temperature swing to cycle between ammonium carbonate and ammonium bicarbonate. This reaction has a significantly lower heat of reaction than amine-based systems, resulting in energy savings, provided the absorption/desorption cycle can be limited to this mechanism. Other advantages of ammonia-based absorption over amine-based systems include the potential for high CO_2 capacity, the lack of degradation during absorption/regeneration, a tolerance of O_2 in the fluegas, low cost, and the potential for regeneration at high pressure.

Powerspan Corp. subsequently licensed the aqueous ammonia process in 2007 and re-branded it as ECO_2. Through integration with its ECO multi-pollutant control system, Powerspan is currently conducting a 1-MW pilot test at FirstEnergy's R.E. Burger Power Station in Ohio. Powerspan has also announced plans to conduct full-scale demonstrations (120 MW) of the ECO_2 process at NRG Energy's W. A. Parish Power Plant in Texas and Basin Electric's Antelope Valley Station in North Dakota beginning in 2012 (*28*).

Oxy-combustion

PC oxy-combustion involves the use of relatively pure O_2 mixed with recycled fluegas (primarily CO_2) for coal combustion to produce a concentrated CO_2 stream. Experience with coal oxy-combustion is limited, so continued R&D on oxy-combustion flame characteristics, burner and coal-feed design, and analyses of the interactions between oxy-combustion products and boiler materials is necessary to ensure the development of low-cost and efficient oxy-combustion power plant systems. DOE/NETL is conducting laboratory- through pilot-scale R&D related to:

- advanced oxy-combustion boilers designed with new materials of construction to handle higher flame temperatures and potentially higher sulfur concentrations for co-sequestration applications
- advanced oxy-burner designs to maintain a stable combustion flame
- novel boiler designs with integrated O_2 separation to reduce the cost of O_2 production

• advanced fluegas purification and compression technologies.

B&W successfully completed oxy-combustion testing at the 1.5-MW_{th} scale and is currently operating a 30-MW_{th} oxy-combustion pilot unit at its Clean Environment Development Facility in Alliance, OH. Preliminary results indicate that fluegas volume is reduced by about 80% while achieving CO_2 concentrations higher than 80%. Pilot-scale testing has also demonstrated a smooth transition between air- and oxy-firing modes, and led to the development of two near-full-scale oxy-burners — the DRB-XCL for eastern bituminous coal and the DRB-PAX for low-rank coals (*10*).

In 2004, Alstom Power conducted pilot-scale (3-MW_{th}) testing of an oxygen-fired circulating fluidized bed (CFB) combustor with both bituminous coal and petroleum coke in O_2/CO_2 mixtures containing up to 50% O_2 by volume. The testing successfully addressed several technical issues, such as furnace operability, temperature control, heat transfer, recarbonization, criteria-pollutant and trace gaseous emissions, and unburned carbon. The pilot-scale tests confirmed the operability and technical feasibility of an oxygen-fired CFB system. Alstom completed a conceptual design and economic analysis for the conversion of an existing 90-MW CFB unit to oxy-firing that indicated a cost of $37 per ton of CO_2 avoided (22).

Oxygen supply

For oxy-combustion to be a cost-effective power generation option, a low-cost supply of pure O_2 is required. Although a cryogenic ASU can be used to supply high-purity O_2 to the boiler, this commercially available technology is both capital- and energy-intensive (*6*). Novel O_2 production technologies currently under development, such as ion transport membranes, have the potential to reduce the cost of O_2 production.

Praxair, Inc., is investigating the design and operation of oxygen transport membranes (OTMs), which utilize chemical potential for the O_2 separation driving force instead of pressure. The OTMs are designed to integrate directly with the boiler such that the combustion reaction occurs on the fuel side of the membrane, thus creating a low O_2 partial pressure that serves as the driving force. This chemical potential gradient drives O_2 through the membrane without the need for additional air compression. In preparation for pilot-scale testing, a ceramic membrane and seal assembly has been developed for thermal integration between the high-temperature membrane and the combustion process. Prototype single- and multiple-tube reactors have been built to demonstrate membrane performance and durability. Praxair estimates that OTMs can deliver O_2 for oxy-combustion using only 20 to 30% of the energy required for a cryogenic ASU (*23*).

(For more on air separation technology developments, see Shelley, S., "Oxygen and Nitrogen: Onward and Upward," *Chem. Eng. Progress*, **105** (1), pp. 6–10, Jan. 2009. — Editor)

Chemical looping combustion

CLC is an advanced coal oxy-combustion technology that involves the use of a metal oxide or other compound as a carrier to transfer O_2 from the combustion air to the fuel. CLC (Figure 4) splits combustion into separate oxidation and reduction reactions. The metal oxide (*e.g.*, iron, nickel, copper, or manganese) releases the O_2 in a reducing atmosphere, and the O_2 reacts with the fuel. The metal is then recycled back to the oxidation chamber, where the metal oxide is regenerated by contact with air.

Since direct contact between the fuel and combustion air is avoided, the products of combustion (CO_2 and H_2O) are kept separate from the rest of the fluegas (primarily N_2). The main advantage of the CLC process is that an ASU is not required and CO_2 separation takes place during combustion.

R&D projects will advance the development of CLC systems by addressing key issues such as solids handling and O_2 carrier capacity, reactivity, and attrition (*24*, *25*).

Alstom Power plans to install and operate a 3-MW_{th} CLC prototype at its existing power plant laboratory in Windsor, CT. The prototype will utilize limestone as the O_2 carrier and include process loops to transfer solids and

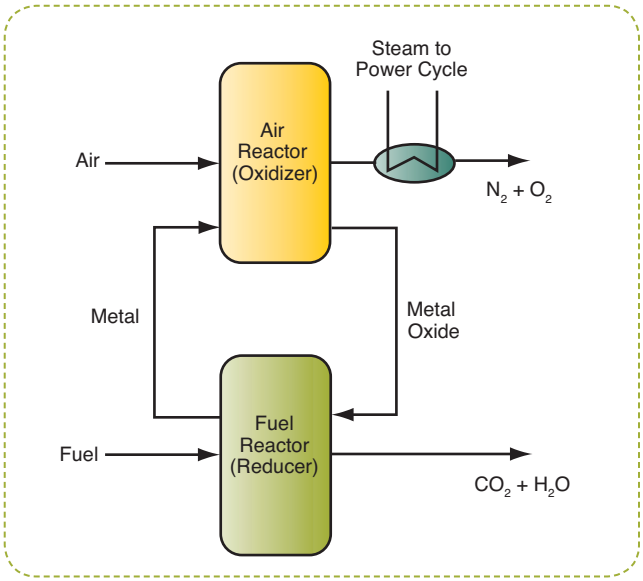

▲ **Figure 4.** In chemical looping combustion, direct contact between the fuel and the combustion air is avoided.

O_2 between the reduction and oxidation reactors. Information obtained from operation will be used to develop a technical plan and cost estimate for a subsequent commercial demonstration project at a full-scale power plant (*26*).

CO_2 compression

In preparation for pipeline transport and permanent storage (*e.g.*, in deep geologic formations or used for enhanced oil recovery), the concentrated CO_2 stream must be further dehydrated and compressed to a supercritical liquid (1,070 psi [74 bar]). DOE/NETL estimates that for a new 667-MW_{gross} supercritical PC power plant, multi-stage, centrifugal CO_2 compression from the stripper regeneration column (20–25 psi) to a pipeline pressure of 2,200 psi would consume nearly 50 MW of auxiliary power, or about 0.1 MW per ton of CO_2 (*6*).

Liquefaction of CO_2 to supercritical conditions can take place via either of two thermodynamic routes — multi-stage compression with interstage cooling, or a combination of compression, cooling, and pumping to supercritical pressures.

In pursuit of the latter approach, Southwest Research Institute is investigating the use of refrigeration to liquefy the CO_2 so that its pressure can be increased using a pump rather than a compressor. The primary power requirements for the hybrid refrigeration approach are for the initial compression to boost the CO_2 to approximately 250 psi, and for the refrigeration required to liquefy the gaseous CO_2. Once the CO_2 is liquefied, the pumping power to boost the pressure to pipeline supply pressure is minimal.

Ramgen Power Systems is developing a supersonic shock-wave compression technology that features a rotating disk operating at high peripheral speeds to generate shock waves that compress the CO_2. The so-called Rampressor is said to have several advantages over conventional multi-stage or hybrid refrigeration. Because shock compression employs only two stages of compression (vs. six to ten stages for the multi-stage approach), it offers potential capital cost savings up to 50%. In addition, the compressed CO_2 is recovered at higher temperatures (400–600°F, depending on the efficiency) due to fewer stages (higher compression ratio), providing an opportunity for heat recovery through integration into either the power plant's steam cycle or CO_2-capture process. Recent prototype testing has achieved a 7.8:1 compression ratio (*27*).

In summary

It is anticipated that through federal research, development, and demonstration (RD&D) programs such as these, a broad suite of cost-effective CO_2-capture technologies will be available for commercial deployment by 2020 to respond to any future climate change regulations imposed upon the nation's power generation sector.

Additional information related to DOE/NETL's EPEC Program is available at www.netl.doe.gov/technologies/coalpower/ewr/co2/index.html. CEP

Acknowledgement

This article would not have been possible without the efforts of the DOE/NETL project managers and researchers who provided valuable technical input. The authors would like to acknowledge the contributions of Thomas Feeley III, Henry Pennline, Charles Alsup, Heino Beckert, Jose Figueroa, David Lang, Bruce Lani, William Aljoe, Charles Miller, Morgan Mosser, Robert Patton, and Andrew O'Palko.

Disclaimer

Neither the United States government nor any agency thereof, nor any of their employees, makes any warranty, express or implied, or assumes any legal liability or responsibility for the accuracy, completeness, or usefulness of any information, apparatus, product, or process disclosed, or represents that its use would not infringe privately owned rights. Reference therein to any specific commercial product, process, or service by trade name, trademark, manufacturer, or otherwise does not necessarily constitute or imply its endorsement, recommendation, or favoring by the U.S. government or any agency thereof. The views and opinions of authors expressed herein do not necessarily state or reflect those of the U.S. government or any agency thereof.

JARED P. CIFERNO is the technology manager of the Existing Plants — Emissions and Capture Program at the U.S. Dept. of Energy's National Energy Technology Laboratory (626 Cochrans Mill Road, Pittsburgh PA 15236; Phone: 412-386-5862; E-mail: jared.ciferno@netl.doe.gov). He is responsible for overseeing NETL's $40-million/yr Existing Plants Program, which consists of more than 40 projects related to power plant water management and carbon dioxide control for new and existing pulverized-coal power plants. His experience encompasses a broad spectrum of technology areas, including electric power generation, advanced separation processes, coal conversion processes, and simulation/systems analysis. Ciferno has BS and MS degrees in chemical engineering from the Univ. of Pittsburgh.

TIMOTHY E. FOUT serves as a project manager in the Existing Plants Div. of the National Energy Technology Laboratory, where he manages cooperative agreements that focus on carbon-capture technology development. He received his BS and MS in chemical engineering from West Virginia Univ.

JAMES T. MURPHY is a senior environmental engineer with Science Applications International Corp. (SAIC), which serves as an onsite support contractor for National Energy Technology Laboratory. Murphy currently serves as the subtask manager, providing technical support for DOE/NETL's Existing Plants R&D program. Prior to joining SAIC, he worked for about 30 years for Allegheny Energy in various positions relating to coal-fired power plant environmental controls. He holds a BS in mechanical engineering and an MBA from the Univ. of Pittsburgh.

ANDREW P. JONES is an environmental engineer with SAIC. He provides general site support for National Energy Technology Laboratory, with a focus on mercury and carbon dioxide control technologies for new and existing coal-fired power plants. He received a BS in chemical engineering from the Univ. of Pittsburgh.

Literature Cited

1. **U.S. Dept. of Energy,** "Annual Energy Outlook 2008, Revised to include the impact of H.R. 6, Energy Independence and Security Act of 2007," Report No. DOE/EIA-0383, DOE Energy Information Administration (EIA), Washington, DC (2008).
2. **International Energy Agency,** "Energy Technology Perspectives," IEA Communication and Information Office, Paris, France (2008).
3. **Klara, S. M., *et al.*,** "Integrated Collaborative Technology Development Program for CO_2 Sequestration in Geologic Formations — U.S. Dept. of Energy R&D," *Energy Conversion and Management*, **44,** pp. 2699–2712 (2003).
4. **U.S. Dept. of Energy,** "Carbon Sequestration Technology Roadmap and Program Plan," DOE Office of Fossil Energy's National Energy Technology Laboratory, Pittsburgh, PA (2007).
5. **U.S. Dept. of Energy,** "Carbon Dioxide Capture from Existing Coal-Fired Power Plants," Publication No. DOE/NETL-401/110907, DOE Office of Fossil Energy's National Energy Technology Laboratory, Pittsburgh, PA (rev. Nov. 2007).
6. **U.S. Dept. of Energy,** "Pulverized Coal Oxycombustion Power Plants, Vol.1: Bituminous Coal to Electricity," Publication No. DOE/NETL-2007/1291, Revision 2, DOE Office of Fossil Energy's National Energy Technology Laboratory, Pittsburgh, PA (Aug. 2008).
7. **Reddy, S., and J. Gilmartin,** "Econamine FG Plus Technology for Post-Combustion CO_2 Capture," presented at the Seventh Annual Conference on Carbon Capture and Sequestration, Pittsburgh, PA (May 5–8, 2008).
8. **Kishimoto, S., *et al.*,** "Current Status of MHI's CO_2 Recovery Technology and Optimization of CO_2 Recovery Plant with a PC-Fired Power Plant," Proceedings of the 9th International Conference on Greenhouse Gas Control Technologies, Washington, DC (Nov. 16–20, 2008).
9. **International Energy Agency,** "Improvement in Power Generation with Post-Combustion Capture of CO_2," Report Number PH4/3, IEA Greenhouse Gas R&D Programme, IEA, Paris, France (2004).
10. **McCauley, K.J., *et al.*,** "Commercialization of Oxy-Coal Combustion: Applying Results of a Large 30-MW_{th} Pilot Project," Proceedings of the 9th International Conference on Greenhouse Gas Control Technologies, Washington, DC (Nov. 16–20, 2008).
11. **Stromberg, L., *et al.*,** "Update on Vattenfall's 30-MW_{th} Oxyfuel Pilot Plant in Schwarze Pumpe," Proceedings of the 9th International Conference on Greenhouse Gas Control Technologies, Washington, DC (Nov. 16–20, 2008).
12. **Herzog, H., *et al.*,** "The Capture, Utilization and Disposal of Carbon Dioxide from Fossil Fuel-Fired Power Plants," Final Report to the U.S. Dept. of Energy under Contract No. DE-FG02-92ER30194, Massachusetts Institute of Technology, Cambridge, MA (1993).
13. **Lin, H., *et al.*,** "The Membrane Solution to Global Warming," presented at the Sixth Annual Conference on Carbon Capture and Sequestration, Pittsburgh, PA (May 7–10, 2007).
14. **Trachtenberg, M. C., *et al.*,** "Membrane-Based, Enzyme-Facilitated, Efficient Carbon Dioxide Capture," Proceedings of the 9th International Conference on Greenhouse Gas Control Technologies, Washington, DC (Nov. 16–20, 2008).
15. **Freeman, S., *et al.*,** "CO_2 Capture with Concentrated Aqueous Piperazine," presented at the Seventh Annual Conference on Carbon Capture and Sequestration, Pittsburgh, PA (May 5–8, 2008).
16. **Lu, Y., *et al.*,** "Analysis of Heat Usage and Solvent Selection in Absorption Processes for Post-Combustion CO_2 Capture," presented at the Seventh Annual Conference on Carbon Capture and Sequestration, Pittsburgh, PA (May 5–8, 2008).
17. **Wolsky, A. M., *et al.*,** "CO_2 Capture from the Flue Gas of Conventional Fossil-Fuel-Fired Power Plants," *Environmental Progress*, **13** (3), pp. 214–219 (Aug. 1994).
18. **Maginn, E.,** "Evaluation of Ionic Liquids in Post-Combustion CO_2 Capture," presented at the Seventh Annual Conference on Carbon Capture and Sequestration, Pittsburgh, PA (May 5–8, 2008).
19. **Gray, M. L., *et. al.*,** "Systematic Design of Immobilized Solid Amine Sorbents for the Capture of Carbon Dioxide," presented at the Sixth Annual Conference on Carbon Capture and Sequestration, Pittsburgh, PA (May 7–10, 2007).
20. **Nelson, T. O., *et al.*,** The Dry Carbonate Process: Carbon Dioxide Recovery from Power Plant Flue Gas," Proceedings of the 9th International Conference on Greenhouse Gas Control Technologies, Washington, DC (Nov. 16–20, 2008).
21. **Benin, A., *et al.*,** "Metal Organic Frameworks (MOFs) for CO_2 Capture," presented at the 2008 AIChE Spring National Meeting, New Orleans, LA (Apr. 7–9, 2008).
22. **Suraniti, S. L.,** "Alstom Oxyfuel CFB Boilers: A Promising Option for CO_2 Capture," Proceedings of the 9th International Conference on Greenhouse Gas Control Technologies, Washington, DC (Nov. 16–20, 2008).
23. **Van Hassel, B., *et al.*,** "Oxygen Transport Membrane Based Oxycombustion for CO_2 Capture from Coal Power Plants," presented at the Seventh Annual Conference on Carbon Capture and Sequestration, Pittsburgh, PA (May 5–8, 2008).
24. **Tian, H., *et al.*,** "Investigation of Chemical Looping Combustion of Coal Utilizing Various Oxygen Carriers," presented at the Seventh Annual Conference on Carbon Capture and Sequestration, Pittsburgh, PA (May 5–8, 2008).
25. **Andrus, H.,** "Chemical Looping Combustion — R&D Efforts of ALSTOM," presented at IEA GHG International Oxy-Combustion Network 2nd Workshop, Windsor, CT (Jan. 24–26, 2007).
26. **Andrus, H.,** "ALSTOM Chemical Looping Combustion Coal Power, Technology Development Prototype," presented at the DOE/NETL Phase IVA Kickoff Meeting, Pittsburgh, PA (Nov. 18, 2008).
27. **Baldwin, P.,** "Ramgen Power Systems Low-Cost, High-Efficiency CO_2 Compressor," presented at the Seventh Annual Conference on Carbon Capture and Sequestration, Pittsburgh, PA (May 5–8, 2008).
28. **McLarnon, C. R., and J. L. Duncan,** "Testing of Ammonia-Based CO_2 Capture with Multi-Pollutant Control Technology," Proceedings of the 9th International Conference on Greenhouse Gas Control Technologies, Washington, DC (Nov. 16–20, 2008).