Advanced Power Plant Development and Analyses Methodologies

Final Report

Reporting Period: August 1, 2000 – June 30, 2006

PRINCIPAL AUTHORS

Dr. A. D. Rao
Dr. G. S. Samuelsen
Dr. F. L. Robson
Mr. B. Washom
Mr. S. G. Berenyi

October 13, 2006

Award No. DE-FC26-00NT40845

PREPARED BY

Advanced Power and Energy Program
University of California
Irvine, California 92697-3550

Kraftwork Systems, Inc.
P.O. Box 115
Amston, Connecticut 06231

Spencer Management Associates
24 Sandstone Ct.
Alamo, California 94507

Rolls-Royce Corporation
P. O. Box 420
Indianapolis, Indiana 46206

DISCLAIMER

This report was prepared as an account of work sponsored by an agency of the United States Government. Neither the United States Government not any agency thereof, nor any of their employees, makes any warranty, express or implied, or assumes any legal liability or responsibility for the accuracy, completeness, or usefulness of any information, apparatus, product, or process disclosed, or represents that its use would not infringe privately owned rights. Reference herein to any specific commercial product, process, or service by trade endorsement, recommendation, favoring by the United States Government or any agency thereof. The views and opinions of the authors expressed herein do not necessarily state or reflect those of the United States Government or any agency thereof.

ABSTRACT

Under the sponsorship of the U.S. Department of Energy/National Energy Technology Laboratory, a multi-disciplinary team led by the Advanced Power and Energy Program of the University of California at Irvine is defining the system engineering issues associated with the integration of key components and subsystems into advanced power plant systems with goals of achieving high efficiency and minimized environmental impact while using fossil fuels. These power plant concepts include "Zero Emission" power plants and the "FutureGen" H_2 co-production facilities. The study is broken down into three phases. Phase 1 of this study consisted of utilizing advanced technologies that are expected to be available in the "Vision 21" time frame such as mega scale fuel cell based hybrids. Phase 2 includes current state-of-the-art technologies and those expected to be deployed in the nearer term such as advanced gas turbines and high temperature membranes for separating gas species and advanced gasifier concepts. Phase 3 includes identification of gas turbine based cycles and engine configurations suitable to coal-based gasification applications and the conceptualization of the balance of plant technology, heat integration, and the bottoming cycle for analysis in a future study. Also included in Phase 3 is the task of acquiring / providing turbo-machinery in order to gather turbo-charger performance data that may be used to verify simulation models as well as establishing system design constraints. The results of these various investigations will serve as a guide for the U. S. Department of Energy in identifying the research areas and technologies that warrant further support.

TABLE OF CONTENTS

LIST OF TABLES **6**
LIST OF ILLUSTRATIONS **8**
INTRODUCTION **10**
RESULTS AND DISCUSSION – PHASE 1 ..... **12**
SUB-SYSTEM SELECTION 12
SCREENING ANALYSIS 14
Natural Gas Cases 15
Coal Based Cases 15
DETAILED ANALYSIS 15
Design Basis 16
Natural Gas Based SOFC / HAT Hybrid 16
Process Description 16
Performance Estimates 17
Coal Based Advanced Transport Reactor (ATR) Gasification SOFC Hybrid 18
Process Description 18
Performance Estimates 20
Cost Estimates 20
Coal Based "Zero Emission" Plant with Vision 21 Technology 21
Process Description 21
Performance Estimates 23
Coal Based H_2 Coproduction with CO_2 Capture 23
Process Description 23
Performance Estimates 26
NONTECHNICAL ISSUES 61
The Role of Trading Groups 63
RESULTS AND DISCUSSION – PHASE 2 ..... **65**
TASK 1 - EFFICIENT RECOVERY OF CO_2 IN CURRENT STATE-OF-THE-ART PLANTS 65
Gasifier 65
GE Gasifier versus Shell Gasifier 65
GE Gasifier versus E-Gas Gasifier 67
Power Block and Heat Recovery 68
Solid Oxide Fuel Cell 68
Gas Turbines 68
Air Separation Unit 70
Slurry Options 72
NOx Emission Control 73
Acid Gas Removal 73
Metal Carbonyls 74
Mercury, Arsenic, Cadmium and Selenium 75
COAL BASED NEAR ZERO EMISSION / H_2 COPRODUCTION PLANT WITH SELEXOL™ 75
Process Description and Flow Diagrams 75

Performance Estimates 86
Cost Estimates 86
COAL BASED NEAR ZERO EMISSION / H_2 COPRODUCTION PLANT WITH CO_2LD Sep^{SM} 86
Process Description and Flow Diagrams 87
Performance Estimates 88
Cost Estimates 88
TASK 2 - EFFICIENT RECOVERY OF CO_2 IN INTERMEDIATE LEVEL TECHNOLOGY PLANT 88
Process Description and Flow Diagram 88
Performance Estimates 90
Cost Estimates 91
TASK 3 - EFFICIENT RECOVERY OF CO_2 IN ADVANCED TECHNOLOGY PLANT 92
Process Description and Flow Diagram 92
Performance Estimates 93
Cost Estimates 94
RESULTS AND DISCUSSION – PHASE 3 117
TASK 1 - ADVANCED TURBINE AND TURBINE SYSTEMS ASSESSMENT 117
Gas Turbine Technology 117
Gas Turbine Firing Temperature 119
Gas Turbine Pressure Ratio 119
Combustor Developments 120
IGCC Applications 121
Novel Cycles 125
TASK 2 - ROLLS-ROYCE TURBOGENERATOR DEVELOPMENT 128
Background 128
Period of Performance 128
Project summary 128
Development work with initial laboratory turbogenerator (S/N 30001) 128
Generator and Power Electronics Development 129
Test stand 129
Deliverable turbogenerator S/N 30002 129
Test Data 129
Control system evolution 130
Compressor maps 130
Sample data 131
CONCLUSIONS 139
PHASE 1 139
PHASE 2 142
PHASE 3 146
REFERENCES 148
APPENDIX A - ANALYSIS TOOLS 151
APSAT 151
SOFC Model 151
Gas Turbine 152
Humidifier Model 152
Compressor and Steam Turbine Models 153
SOAPP 153
REFERENCES 153

APPENDIX B – SCREENING ANALYSIS 158
NATURAL GAS BASED CASES 158
High Pressure SOFC Integrated with High Pressure Ratio Intercooled Gas Turbine 158
High Pressure SOFC Integrated with HAT 159
Atmospheric Pressure MCFC Integrated with Intercooled Gas Turbine 160
O_2 Breathing High Pressure SOFC Integrated with HAT cycle 160
Advanced Rankine Cycle Combusting H_2 with O_2 161
COAL BASED CASES 161
Integrated Gasification SOFC / GT Hybrid Systems 161
Integrated Gasification SOFC / HAT Hybrid Systems 162
Advanced Transport Reactor Gasifier 163
Partial Gasification Hybrid Systems 164
REFERENCES 166
APPENDIX C - BASE CASES 178
COAL BASED IGCC PLANT WITHOUT CO_2 RECOVERY 178
Process Description 178
Performance and Cost Estimates 179
COAL BASED IGHAT PLANT WITH CO_2 RECOVERY - "ZERO EMISSION" WITH NEARER TERM TECHNOLOGY 179
Process Description 179
Performance Estimates 179
REFERENCES 179
APPENDIX D – ECONOMIC ANALYSIS METHODOLOGY 182
BASIS OF ECONOMIC ANALYSIS 182
Organization and Start-up Costs 182
Working Capital 182
Land Costs 182
Operating and Maintenance Cost Estimates 182
Fixed Operating Costs 182
Variable Operating Costs 183
By-Product Credit 183
Operating and Maintenance Costs 184
Fuel Cost 184
APPENDIX E – GAS TURBINE DEVELOPMENT NEEDS 187
POTENTIAL PATHS 188
Aero Frame 188
Intercooled Aeroderivative 189
DEVELOPMENT PLANS 190
REFERENCES 190
APPENDIX F – ROLLS ROYCE TURBOMACHINERY HARDWARE STATUS 191

LIST OF TABLES

Table 1- 1: Gas Turbine Design Basis 29
Table 1- 2: Fuel Cell Design Basis 29
Table 1 - 3: Illinois No. 6 Coal Analysis – "As Received" 30
Table 1 - 4: Limestone Analysis – "As Received" 30
Table 1 - 5: State Point and Performance Data - SOFC / HAT Hybrid 32
Table 1 - 6: Major Stream Data - Coal Based ATR Gasification SOFC Hybrid 47
Table 1 - 7: Performance Summary - Coal Based ATR based SOFC Hybrid 49
Table 1 - 8: ROM Plant Cost Summary - Coal Based ATR based SOFC Hybrid 50
Table 1 - 9: Major Stream Data - Coal Based "Zero Emission" Plant with Vision 21 Technology 52
Table 1 - 10: Performance Summary - Coal Based Zero Emission Plant with Vision 21 Technology 55
Table 1 - 11: Major Stream Data - Coal Based H_2 Coproduction with CO_2 Capture 57
Table 1 - 12: Performance Summary - Coal Based H_2 Coproduction with CO_2 Capture 60
Table 1 - 13: Current Status of US Power Cycles 64
Table 1 - 14: Net New Generating Assets in the U.S. (GW) 64
Table 2- 1: Stream Data - Near Zero Emission / H_2 Coproduction with Selexol® 100
Table 2- 2: Performance Summary - Near Zero Emission / H_2 Coproduction with Selexol® 102
Table 2- 3: ROM Plant Cost Summary - Near Zero Emission / H_2 Coproduction with Selexol® 103
Table 2- 4: Stream Data - Near Zero Emission / H_2 Coproduction with CO_2LDSep^{SM} 105
Table 2- 5: Performance Summary - Near Zero Emission / H_2 Coproduction with CO_2LDSep^{SM} 107
Table 2- 6: ROM Plant Cost Summary - Near Zero Emission / H_2 Coproduction with CO_2LDSep^{SM} 108
Table 2- 7: Stream Data - Near Zero Emission / H_2 Coproduction with H_2 Separation Membrane Reactor 110
Table 2- 8: Performance Summary - Near Zero Emission / H_2 Coproduction with H_2 Separation Membrane Reactor 111
Table 2- 9: ROM Plant Cost Summary - Near Zero Emission / H_2 Coproduction with H_2 Separation Membrane Reactor 112
Table 2- 10: Stream Data - Near Zero Emission / H_2 Coproduction with GRAZ Cycle 114
Table 2- 11: Performance Summary - Near Zero Emission / H_2 Coproduction with GRAZ Cycle 115
Table 2- 12: ROM Plant Cost Summary - Near Zero Emission / H_2 Coproduction with GRAZ Cycle 116
Table 3 - 1: Typical Clean Syngas Compositions (Dry and Sulfur Free Basis) 132
Table 3 - 2: Performance parameters recorded per data point 138
Table A - 1: Comparison of Simulation Results with Data 155
Table A - 2: Comparison between APSAT and ASPEN 155

Table B - 1: Summary of Performance Estimates - Screening Analysis of Natural Gas Cases 167
Table C - 1: ROM Cost Estimate – Coal based IGCC Plant without CO_2 Recovery 180
Table D - 1: Financial Input for COE Calculations 185
Table D - 2: Maintenance Cost Factors 186
Table D - 3: Catalyst and Chemicals 186

LIST OF ILLUSTRATIONS

Figure 1 - 1: Sub-system Selection 27
Figure 1 - 2: Thermal Efficiency of Various Gas Turbine based Cycles 28
Figure 1 - 3: Cycle Diagram - Natural Gas Based SOFC / HAT Hybrid 31
Figure 1 - 4: Block Flow Sketch - Coal Based ATR Gasification SOFC Hybrid 45
Figure 1 - 5: Reactor / Expander Topping Cycle 46
Figure 1 - 6: Block Flow Sketch - Coal Based "Zero Emission" Plant with Vision 21 Technology 51
Figure 1 - 7: Block Flow Sketch - Coal Based H_2 Coproduction with CO_2 Capture 56
Figure 2- 1: GE Total Quench Gasifier 95
Figure 2- 2: Shell Gasifier 96
Figure 2- 3: E-Gas Gasifier 97
Figure 2- 4: Block Flow Sketch – Acid Gas Removal using the Amine Process 98
Figure 2- 5: Overall Block Flow Diagram - Near Zero Emission / H_2 Coproduction with Selexol® 99
Figure 2- 6: Acid Gas Removal - Near Zero Emission / H_2 Coproduction with Selexol® 101
Figure 2- 7: Overall Block Flow Diagram - Near Zero Emission / H_2 Coproduction with CO_2LDSep^{SM} 104
Figure 2- 8: Acid Gas Removal - Near Zero Emission / H_2 Coproduction with CO_2LDSep^{SM} 106
Figure 2- 9: Overall Block Flow Diagram – Near Zero Emission / H_2 Coproduction with H_2 Separation Membrane Reactor 109
Figure 2- 10: Overall Block Flow Diagram - Near Zero Emission / H_2 Coproduction with GRAZ Cycle 113
Figure 3 - 1: Gas Turbine and the Ideal Brayton Cycle P-V Diagram 133
Figure 3 - 2: Impact of Firing / Metal Temperature on Efficiency 133
Figure 3 - 3: Reheat Gas Turbine Cycle 134
Figure 3 - 4: HAT Cycle 134
Figure 3 - 5: Partial Oxidation Cycle 135
Figure 3 - 6: HP Compressor Map – Nondimensionalized 136
Figure 3 - 7: LP Compressor Map – Nondimensionalized 137
Figure A - 1: Schematic of SOFC/GT Hybrid 156
Figure A - 2: Comparison between Predicted and Westinghouse Values at 1 atm and at 10 atm with 2.23 cm outside diameter and 150 cm length cell 156
Figure A - 3: Variation of Power Output with Compressor Inlet Temperature 157
Figure B - 1: High Pressure SOFC/Intercooled Gas Turbine Hybrid 168
Figure B - 2: High Pressure SOFC/HAT Hybrid 169
Figure B - 3: Atmospheric Pressure MCFC/Intercooled Gas Turbine Hybrid 170
Figure B - 4: O_2 Breathing High Pressure SOFC/HAT Hybrid with CO_2 Recycle 171
Figure B - 5: Advanced Rankine Cycle/Combusting of H_2 with O_2 172

Figure B - 6: Entrained Bed IGCC/Hybrid with HT Cleanup 173
Figure B - 7: Entrained Bed IGCC/Hybrid with LT Cleanup..... 174
Figure B - 8: Entrained Bed IGHAT with LT Cleanup 175
Figure B - 9: Air Blown ATR IGCC Hybrid 176
Figure B - 10: Foster-Wheeler Partial Gasifier with Char Combustor 177
Figure C - 1: Block Flow Sketch - Coal Based "Zero Emission" Plant with Nearer Term Technology 181

INTRODUCTION

Under the sponsorship of the U.S. Department of Energy / National Energy Technology Laboratory, a multi-disciplinary team led by the Advanced Power and Energy Program of the University of California at Irvine is defining the system engineering issues associated with the integration of key components and subsystems into advanced power plant systems with goals of achieving high efficiency and minimized environmental impact while using fossil fuels. These power plant concepts include "Zero Emission" power plants and the "FutureGen" H_2 co-production facilities. The study is broken down into three phases.

Phase 1 of this study consisted of utilizing advanced technologies that are expected to be available in the "Vision 21" time frame such as mega scale fuel cell based hybrids. The overall objectives of this Vision 21 program are:

- produce electricity and transportation fuels at competitive costs
- minimize environmental impacts associated with fossil fuel usage, and
- attain high efficiency

The efficiency targets are 75% (LHV) for natural gas fueled plants and 60% (HHV) for coal fueled plants producing electricity only, that is, plants without CO_2 capture nor co-production of any transportation fuels or H_2 for this Phase 1 work. The approach taken in this investigation consists of first identifying the sub-systems that make up a complete power plant followed by a screening analysis in order to narrow down the number of cases for detailed analysis as summarized in the following "Results and Discussion" section while the analytical tools utilized in these analyses are described in Appendix A:

- Sub-system Selection – the selection of the fuel processing, power generation and emission control technology scenarios with potential to achieve the Vision 21 goals.
- Screening Analysis – analyze and optimize selected technology scenarios at a screening level to select cycle configurations. The optimization includes the selection of the cycle configuration as well as the cycle operating conditions. The approach taken in performing this analysis is to start with basic designs with relatively near term technology and when the Vision 21 targets are not realized, incorporate more advanced designs.
- Detailed Analysis – the selected promising cycles are next analyzed to develop detailed design point performance. A rough-order-of-magnitude (ROM) installed cost of the SOFC system is also estimated. This is accomplished by first establishing the levelized cost of electricity of a "Base Case" plant which consists of an advanced coal based plant but utilizing an advanced gas turbine combined cycle instead of an SOFC hybrid. Next the ROM installed cost of the SOFC system is established in a manner such that the levelized cost of electricity of the plant is identical to that of the plant utilizing the advanced gas turbine combine cycle (i.e., without the SOFC). The cost of the fuel cell system thus estimated then provides the fuel cell developers with a basis for setting the goals for their system costs.

Phase 2 includes current state-of-the-art technologies and those expected to be deployed in the nearer term such as advanced gas turbines and high temperature membranes for separating gas species and advanced gasifier concepts. Phase 3 includes an assessment of advanced turbine and turbine systems suitable to coal-based gasification applications. Also included in Phase 3 is a Rolls-Royce funded program for the development of a turbogenerator tailored to the synergetic integration with the Rolls-Royce Fuel Cell Systems Ltd. (RRFCS) high temperature Solid Oxide Fuel Cell (SOFC). As part of the ongoing overall RRFCS fuel cell development program, the objective of this specific subcontract is to provide and share selected performance and emissions data with UCIrvine. This data will be used primarily for verification of numerical modeling of hybrid SOFC systems.

The results of these investigations will serve as a guide for the U. S. Department of Energy in identifying the research areas and technologies that warrant further support.

RESULTS AND DISCUSSION – PHASE 1

The following section provides a summary of the results and their discussion for the three phases of this study, i.e., sub-system selection, screening analysis and detailed analysis.

SUB-SYSTEM SELECTION

Options for the sub-systems for natural gas and coal are depicted in Figure 1-1 along with various combinations for linking of the fuel with the fuel processing technology, power generation technology and emissions control technology. The characteristics of pipeline quality natural gas allow it to be used directly in gas turbine based cycles such as a combined cycle or a Humid Air Turbine (HAT) cycle (Rao, 1989). Natural gas may also be used in fuel cells after some treatment (desulfurization, humidification and reforming). With the combined cycle option, some post combustion control may be required such as NOx and CO control depending on how stringent the local environmental regulations are. The HAT cycle does not require any form of NOx control because of the large concentration of water vapor present in the combustion air which minimizes the formation of thermal NOx (Bhargava, 1999). The fuel cells, which oxidize the fuel predominantly by electrochemical reactions do not require any form of NOx control either; combustion of the depleted fuel leaving the cell produces very low amounts of NOx.

These same options consisting of gas turbine based technologies or fuel cells can be used in coal based plants if the coal is gasified to produce syngas and the contaminants removed from the syngas prior to supplying the gas to the power block, fuel specifications for fuel cells and high performance gas turbines being very stringent (high performance gas turbines have stringent limits on levels of contaminants that include sulfur, alkaline metals, vanadium). Alternately, if coal is directly used as in various types of fluid beds or in pulverized steam boilers or in indirectly fired cycles, the effluent from the power generation systems will require extensive post combustion emission controls such as flue gas desulfurization, NOx, particulate and trace element removal devices. In gasification on the other hand, the syngas cleanup to remove contaminants such as the sulfur and nitrogen compounds, and particulates is performed on a gas stream with a significantly smaller volume and with contaminant concentrations significantly higher, making it much easier to remove. Heavy petroleum fractions and biomass must also be processed and cleaned in a similar manner before these fuels can be "integrated" with the power generation system.

The gasification sub-system is further divided into number of processing units including the oxidant supply unit. Whether the gasification process uses oxygen or air depends on the operating temperature of the gasifier, whether hot syngas clean up is utilized, and whether CO_2 recovery or H_2 coproduction is required. With air blown systems, the efficiency of the gasifier (by itself) is lower and larger downstream equipment is required for processing the syngas which is diluted with nitrogen. For a gasifier operating at high temperatures (in excess of 1200C), the nitrogen accompanying the oxygen in the air increases the degradation of the chemically bound energy of the coal into sensible heat energy within the gasifier which is carried away with the syngas, thus reducing the cold gas efficiency of the gasifier. On the other hand, the air

separation unit is eliminated along with its parasitic loads and high capital cost.

This initial Sub-system Selection task has eliminated from consideration the direct combustion coal and indicated that fuel processing in case of coal will be either oxygen or air blown gasification depending on the gasifier operating temperature, syngas cooling, and the product slate. It has also set the requirements for gas clean up based on the specifications dictated by the high performance gas turbines and fuel cells. Note that the gasification option makes the power cycles fuel flexible.

With respect to the power generation technology option, cycles based on a gas turbine alone without fuel cells cannot meet the efficiency goals of the Vision 21 program as evidenced by the efficiencies calculated for various gas turbine based cycles as a function of the combustor exhaust temperature (Figure 1-2). The efficiency of an advanced combined cycle utilizing a steam cooled gas turbine, even with a combustor exhaust temperature as high as 1900C (3450F), is in the neighborhood of 65% (LHV), which is significantly lower than the 75% (LHV) goal for natural gas. With the HAT cycle, a higher combustor exhaust temperature may be utilized since the cycle is not as much constrained by NOx emissions as the combined cycle (Chen, et al., 2002). Still, the efficiency is limited to less than 70% (LHV) for natural gas.

Thus, gas turbines integrated with fuel cells (hybrids) are required for these Vision 21 power plants. Three hybrid cycles are identified initially for the Screening Analysis phase of this study for the natural gas based plants that have the potential to reach the Vision 21 efficiency goal:

1. High pressure solid oxide fuel cell (SOFC) integrated with a high-pressure ratio intercooled gas turbine
2. High pressure solid oxide fuel cell (SOFC) integrated with the HAT cycle
3. Atmospheric pressure molten carbonate fuel cell (MCFC) integrated with a high-pressure ratio intercooled gas turbine.

Two “zero emission” natural gas based plants, that is, plants recovering the carbon dioxide for carbon sequestration are also identified for the screening analysis:

1. O_2 breathing high pressure SOFC integrated with HAT cycle and CO_2 recycle
2. Advanced Rankine cycle (using gas turbine technology) combusting H_2 with O_2 in rocket engine technology combustor.

Three cases are identified for the Screening Analysis phase of this study for the coal-based plants that have the potential to reach the Vision 21 efficiency goal:

1. Shell gasifier with hot gas cleanup providing syngas to a high pressure SOFC based hybrid
2. Texaco gasifier providing syngas to a high pressure SOFC integrated with the HAT cycle
3. Foster-Wheeler partial gasifier integrated with a SOFC based hybrid.

Two “zero emission” coal based plants are identified for the screening analysis:

1. Shell gasifier with hot gas cleanup providing syngas to an O_2 breathing high pressure SOFC integrated with HAT cycle and CO_2 recycle

2. Shell gasifier with hot gas cleanup and H_2 separation using high temperature membranes (precombustion CO_2 recovery) and the advanced Rankine cycle (using gas turbine technology and H_2/air combustor derived from the rocket engine technology).

An additional case that coproduces Fischer-Tropsch liquids (in addition to electric power) is also identified for the screening analysis:

1. Texaco gasifier with cold gas cleanup providing syngas to a Fischer-Tropsch synthesis unit with unconverted gas supplied to an advanced HAT system.

This case represents an advanced coal-based power system in which a high value liquid fuel is produced along with electric power. Because the main product is the liquid fuel, the power system may not operate as a base load plant and may, in fact, operate with several stops and starts per day. This means that the plant is not tightly integrated and that fuel (syngas) is delivered "across the fence" to the power system. Because of the probable need for on/off and extensive part-load operation, a lower cost, less complex, but still highly efficient power system such as a HAT would be the choice. The part load performance of the HAT cycle has been compared to that of a combined cycle; the heat rate of an integrated gasification HAT (IGHAT) remains essentially constant down to 50% load whereas in the case of an integrated gasification combined cycle (IGCC), the heat rate increases by as much as 30% on a single train basis (Rao et.al., 1993).

SCREENING ANALYSIS

A 300 MW nominal power plant output has been selected as representative of the minimum economic size for central power stations, especially those with gasification. Each of the systems has a gas turbine, or a gas turbine-like component. The design values for the turbines used in the screening analysis are given in Table 1-1. The initial screening analysis identified three categories of natural gas fueled hybrid cycles having the potential to reach the Vision 21 efficiency goal (Appendix B provides more detailed information on the cases evaluated in this phase of the study):

1. High pressure internally reforming solid oxide fuel cell (SOFC) integrated with a high-pressure ratio intercooled gas turbine
2. High pressure internally reforming solid oxide fuel cell (SOFC) integrated with the Humid Air Turbine (HAT) cycle
3. Atmospheric pressure internally reforming molten carbonate fuel cell (MCFC) integrated with a high-pressure ratio intercooled gas turbine.

Additionally for the gas-fired systems, two "zero emission" plants, i.e., plants recovering the CO_2 for sequestration were also considered:

1. O_2 breathing high-pressure SOFC integrated with HAT cycle and CO_2 recycle
2. Advanced Rankine cycle (using gas turbine technology) combusting H_2 with O_2 in rocket engine technology combustor.

The power cycles utilized in the coal-based cases were selected from these cycles. The results of the screening analysis indicated that:

Natural Gas Cases

- Both the pressurized SOFC hybrids configurations can achieve 75% thermal efficiency (LHV) while limiting the fuel utilization to 85%.
- The SOFC/HAT hybrid had a significantly higher specific power output than any of the other cycles.
- The atmospheric pressure MCFC hybrid configurations can achieve 75% thermal efficiency (LHV) when the fuel utilization is increased to 90%.
- The O_2 breathing SOFC hybrid configuration with CO_2 recovery can achieve 60% thermal efficiency (LHV) while the efficiency of the advanced Rankine cycle combusting H_2 with O_2 was limited to < 55% thermal efficiency (LHV).

Coal Based Cases

- Conventional high temperature gasification based hybrids even with high temperature gas cleanup do not quite reach the Vision 21 efficiency goal of 60% (HHV).
- Lower temperature gasification is required to increase the cold gas efficiency and thus the overall power plant thermal efficiency in order to achieve the Vision 21 efficiency goal as long as reasonable carbon conversions can be maintained within the gasifier.

The performance along with a description of the above cycles is presented in Appendix B.

DETAILED ANALYSIS

The detailed analysis phase of this study consists of conducting a more in-depth analysis of cases that have evolved from the screening phase to develop the performance estimates, the ultimate goal being to provide a definition for the fuel cell and the gas turbine design parameters along with the interface conditions between the fuel cell, the gas turbine and the balance of plant. These selected cases are listed below:

- Natural Gas Based SOFC/HAT Hybrid
- Coal Based Advanced Transport Reactor (ATR) Gasification SOFC Hybrid
- Coal Based "Zero Emission" Plant with Vision 21 Technology
- Coal Based H_2 Coproduction with CO_2 Capture

A ROM installed cost of the SOFC system is also estimated. This is accomplished by first establishing the levelized cost of electricity of a "Base Case" plant which consists of an advanced coal based plant but utilizing an advanced gas turbine based combined cycle instead of an SOFC hybrid. This Base Case described in Appendix C is derived from the DOE report PED-IGCC-98-006 titled "Transport Gasifier IGCC Base Cases" dated September 1998 (Latest Revision 2000). The gas turbine consists of the Siemens-Westinghouse 501 G machine. Methodology described in EPRI's Technical Assessment Guide is utilized in developing the levelized cost of electricity. The basis for this economic analysis is summarized in Appendix D. Next, the ROM installed cost of the SOFC system is established in a manner such that the levelized cost of electricity of the plant is identical to that of the Base Case plant, i.e., utilizing

the advanced gas turbine combine cycle (without the SOFC). The cost of the fuel cell system thus estimated then provides the fuel cell developers with a basis for setting the goals for their system costs.

Design Basis

The design ambient conditions consisted of utilizing ISO ambient conditions of 15C (59F) dry bulb temperature, 60% relative humidity and sea level. Mechanical draft cooling towers are utilized for plant heat rejection with a 3.9C (7F) approach to the wet bulb temperature. A 11.1C (20F) temperature rise is assumed for the cooling water while a 5.6C (10F) approach temperature is utilized in the steam turbine surface condenser. The design basis for the gas turbine and the fuel cells utilized in this study are summarized in Tables 1-1 and 1-2. The coal utilized in this study consists of a bituminous coal, Illinois No. 6 while limestone is utilized as the bed material for the capture of sulfur in the ATR cases. The analyses for the coal and the limestone are presented in Tables 1-3 and 1-4.

Natural Gas Based SOFC / HAT Hybrid

Process Description

This hybrid cycle as depicted in Figure 1-3 integrates the HAT cycle with the SOFC (tubular SOFCs with central injection tubes for preheating the cathode air are assumed in this study). The HAT cycle utilizes generation of "steam" by directly contacting pressurized air with hot water in a counter-current humidifier and circulating the water leaving the humidifier to recover low temperature heat generated within the cycle. Filtered ambient air is compressed in a low-pressure compressor, intercooled and then further compressed in the high-pressure compressor. The air leaving the high-pressure compressor is first cooled in an aftercooler and then introduced into the humidifier column where it comes into counter-current contact with hot water. A portion of the water is evaporated into the air stream, the heat required for the humidification operation being recovered from the intercooler, the aftercooler and the stack gas by circulating water leaving the humidifier.

The humidifier, by introducing water vapor into the combustion air increased the amount of motive fluid available for expansion in the turbines, while recovering the low temperature heat from the intercooler, aftercooler and the stack gas. Within the humidifier, the water evaporates at successively higher temperatures as the air moves up the humidifier column (as its water vapor content increases) with hot water flowing counter-currently downwards exchanging mass and heat with the pressurized air stream. Furthermore, the water evaporates at temperatures much lower than the boiling point or saturation temperature of pure water since the phase change occurs within the humidifier in the presence of air (at the prevailing partial pressure of water vapor in the air stream). This combined humidifier and water circulating sub-system makes it possible to recover low temperature heat without being constrained by the boiling temperature of pure water while reducing the exergy destruction during heat transfer.

The humid air is first preheated in the gas turbine exhaust (in the recuperator) and then further preheated within the SOFC system. Next the preheated humid air enters the central injection

(preheat) tubes located within the tubular cells where it is preheated to about 1000C and then enters the cathode side of the cell. The natural gas after desulfurization in the activated carbon beds is supplied to the SOFC system. Here it is combined with a portion of the anode exhaust gas, preheated and then fed into the reformer located within the SOFC stack. The reformed gas is then distributed into the anode side of the cells.

Performance Estimates

A potential disadvantage with this cycle, however, is that the partial pressure of the oxygen in the air stream entering the SOFC is reduced which decreases the mass transfer rate of the oxygen to the cathode surface and through the cathode while increasing the cathode concentration and activation polarizations. On the other hand, the thermal efficiency of the cycle is quite insensitive to the pressure ratio (gas turbine compression ratio) in the range of 10 to 20 (the corresponding fuel cell module inlet pressures are 940 kPa and 1,880 kPa, respectively). Thus, by operating the fuel cell at a high pressure, the negative effect of reduced concentration of O_2 in the oxidant stream on the current density can be off-set to some extent. The calculated current density for the SOFC at a cycle pressure ratio of 20 is 272 mA/cm2 with the cell voltage held at 0.68V. This current density was calculated by the SOFC model that utilized the material properties that were derived from data found in literature and are consistent with performance predictions made for a Siemens-Westinghouse tubular SOFC of the mid 1990s vintage as indicated in Appendix A. The cycle pressure ratio of 20 is selected for developing the costs estimates and economics, this case being consistent with the operating pressure required by the fuel cells in the coal based cases, especially those that involve CO_2 recovery and O_2 separation from the air using the ion or oxygen transport membranes. Also the gas turbine inlet temperature decreases as the cycle pressure ratio is increased causing the heat transfer duty of the recuperator to decrease and subsequently its cost. Furthermore, the higher pressure of the working fluid tends to make the equipment within the cycle more compact. The state point and other plant performance data for this case are summarized in Table 1-5. The SOFC produces 192.2 MW which is about 72% of the total gross power while the gas turbine produces 76.6 MW. The net power generated by the plant is 268.6 MW resulting in the 75% (LHV basis) efficiency.

The air to fuel ratio within the SOFC has to be held low in order to increase the inlet temperature to the turbine and thus achieve the Vision 21 goal of 75% (LHV) efficiency (without by-passing fuel around the SOFC or reducing the fuel utilization within the SOFC however, since these result in an overall decrease in the cycle efficiency). With the large amount of water vapor introduced into the air (16% by volume water vapor) by the humidifier and with internal reforming occurring within the stack, the challenges of heat management within the cell stack are reduced. The effective amount of air used in the SOFC while taking credit for the added water and also its higher specific heat as compared to air is about 1.94 times the stoichiometric amount. The corresponding gas turbine inlet temperature is low, about 800C at the pressure ratio of 20. This firing temperature is consistent with the coal based Zero Emission and H_2 Coproduction cases. At the pressure ratio of 20, the cycle specific power output is as high as 1,383 kW/kg/s with the SOFC producing 70% of the total power generated by the system.

Coal Based Advanced Transport Reactor (ATR) Gasification SOFC Hybrid

Process Description

The overall process scheme is depicted in Figure 1-4 while the major stream data for this case are summarized Table 1-6 (note that utility and process condensate streams are not shown). The plant consists of an ATR for converting the coal into syngas while the power block consists of a SOFC based hybrid combined cycle. The ATR has features of a circulating fluidized bed gasifier and is being developed under sponsorship of the DOE at Wilsonville, Alabama (Leonard, R., et.al., 2001; Swanson, M. and Hajicek, D., 2002). A smaller scale ATR is also operated by the Energy and Environmental Research Center at the University of North Dakota (UNDEERC). The ATR has the potential for achieving the overall plant efficiency goals of Vision 21, the main reasons being that (1) the raw syngas leaves the gasifier at a lower temperature (thus a lower fraction of the coal bound energy is degraded to thermal within the gasifier), and (2) a correspondingly lower oxidant demand. Furthermore, the lower raw syngas temperature requires less cooldown, making the syngas coolers less expensive.

Ground Coal along with ground limestone (both < 500 microns particle size) for in-bed sulfur capture (about 85% of the sulfur is expected to be captured along with over 90% of the chlorine) is added to the upper stage of the mixing zone. The gas exits the top of the gasifier riser and goes to a primary cyclone that is connected to a standpipe that receives the unburned char and ash/bed material for recirculation back to the mixing zone. The overall carbon conversion for this air blown ATR is assumed to be 95% based on information provided by Southern Services Company who operate the Wilsonville process demonstration unit (which is lower than the 96.8% conversion assumed in the previous study documented in the DOE Report "Transport Gasifier IGCC Base Cases," PED-IGCC-98-006, June 2000 while the temperature of the raw syngas leaving the gasifier was increased to about 1050ºC).

Ash withdrawn from the ATR has very little carbon in it and its MMD is about 150 microns (coarse ash) and has the consistency/appearance of beach sand. It could be utilized as bed material for a fluidized bed unit. The ash withdrawn from the particulate control device or PCD (filter vessel) has an MMD of about 15 microns (fine ash or char) and typically has 30% carbon and a BTU value of about 5500 Btu/lb. This fine ash or char is in powdery form and is not in a vitrified state. More than 95% of CaS is present in the fine ash. Based on data collected at the Wilsonville PDU, the reactive CaS content of the fine ash has not exceeded 500 ppm (when the reactive CaS exceeds 500 ppm, the ash is considered as hazardous).

The syngas leaves the gasifier at approximately 1050C based again on information provided by Southern Services Company (which is higher than the 900 C assumed in the previously mentioned DOE Report," PED-IGCC-98-006). The syngas is cooled to 400C by generating superheating steam. It then goes to a barrier filter where over 99.99% of the remaining particulates are removed. Next the syngas is fed to chloride guard bed (containing nahcolite), which also removes any other remaining halides. From the chloride guard which is followed by another barrier filter, the fuel gas goes to a zinc titinate bed for sulfur removal and the to the final particulate filter.

A fraction of the syngas is utilized as transport gas for feeding the solids to the ATR. The required amount of gas is first cooled in a series of heat exchangers while providing heat for high pressure steam generation and for the humidifier. The syngas is next further cooled against cooling water and then compressed to the required pressure. A closed loop N_2 system provides the gas required for pressurization of the lock hoppers, while the required make-up N_2 is supplied by on-site stored N_2.

A fraction of the gas turbine compressor discharge air is sent to an aftercooler, boosted in pressure, recuperated, humidified in a counter current packed column utilizing process condensate supplemented with treated make-up water and sent to the mixing zone of the ATR gasifier. The humidification operation generates the entire steam required for the ATR while reducing the amount of waste-water to be treated. The gas turbine also provides the small quantity of pressurized air required by the warm gas cleanup unit.

Emission of mercury from coal-based power plants has gained much attention in the recent past. Warm gas mercury removal processes are being developed and one such process is that being developed by ADA technologies (funded by the EPA and the DOE) that operates around 400C (Butz 2003). The remainder of the clean syngas is passed through a fixed bed reactor containing an Amended Silicates^{TM} sorbent where the mercury is chemisorbed. Next, the syngas is combined with steam and fed to a fixed bed reactor containing a methanation catalyst followed by a turbo-expander as depicted in Figure 1-5. The methanation / shift reactions that occur within the reactor serve in (1) producing additional methane (in addition to that generated within the ATR) and (2) raising the temperature of the syngas (from 384C to 684C). The increased methane content of the syngas assists in providing a heat sink for the heat generated within the SOFC while the increased temperature of the syngas increases the power developed by the turbo-expander which expands the syngas from a pressure of 2,310 kPa to 1,880 kPa. It also reduces the amount of heat exchange required within the SOFC system. Steam is added to the syngas upstream of the methanation reactor to avoid carbon deposition within the reactor as well as within the reformer located in the SOFC stack.

A chloride guard bed consisting of Na on alumina followed by a sulfur guard bed consisting of alternating layers of COS hydrolysis catalyst such as a Co Mo or a Ni MO catalyst and ZnO for the H_2S capture ("purple sandwich") may be included upstream of the methanator as a final cleanup step to remove any trace amounts of the chlorides and sulfur compounds to the level required by the methanation catalyst (and the reforming catalyst within the SOFC system) of 0.1 ppmV for each of these impurities.

The methanated / expanded syngas after being preheated and reformed within the SOFC module is fed to the anode side of the cells. Compressed air supplied by the gas turbine, at approximately 1,880 kPa, is heated in a regenerator against the cathode exhaust gas within the SOFC module and then supplied to the central injection tubes of the tubular fuel cells for further preheat prior to entering the cathode side of the cells. Note that tubular SOFCs with central injection tubes for preheating the cathode air are assumed in this study. The combusted exhaust gas from the SOFC module is expanded in the gas turbine while the heat contained in the gas turbine exhaust is recovered in a heat recovery stream generator (HRSG).

The bottoming cycle in the power block consists of the gas turbine followed by a non-reheat steam cycle. High pressure (HP) superheated steam at 10,880 kPa and 538C is supplied to the steam turbine while intermediate pressure (IP) steam at 2,600 kPa is extracted from the steam

turbine for addition to the syngas upstream of the methanator for carbon control while low pressure (LP) steam at 470 kPa is extracted for the coal drying operation. Char and purged bed material are fed to the sulfator that combusts the char while oxidizing the sulfides. The heat generated is recovered by producing high pressure steam as well as preheating the combustion air required by the sulfator.

Performance Estimates

The plant consumes 2241 MT/D of the bituminous coal and produces 423 MW of electric power while achieving the Vision 21 overall plant net thermal efficiency goal of 60% (HHV). The calculated current density for the SOFC at a cell voltage of 0.75V was 161 mA/cm^2 based on the material properties used in the SOFC model (derived from data found in literature consistent with performance predictions made for a Siemens-Westinghouse tubular SOFC of the mid 1990s vintage as indicated in Appendix A). Table 1-7 provides the plant performance summary. The overall thermal efficiency is determined to decrease only slightly when the fuel cell operating pressure is reduced by more than a third while incorporating the Reactor / Expander topping cycle within the plant design. The net efficiency is reduced to 58.9% (HHV) from 60% (HHV) when the syngas inlet pressure to the fuel cell module is reduced to 1,200 kPa from 1,880 kPa. Reducing the fuel utilization from the design value of 85% to 80% also has a small effect on the thermal efficiency of the plant, reduces to 59.4%.

Cost Estimates

Next an economic analysis is performed to establish the ROM installed cost of the SOFC system. Appendix D summarizes the various assumptions made for this analysis. An ROM installed cost of the SOFC system of $400/kW (with engineering fee and all contingencies included) in a coal based plant results in an overall cost of electricity of 39 Mills/kWh (10th year levelized cost utilizing the Electric Power and Research Institutes methodologies documented in their Technical Assessment Guide) which is identical to that of the Base Case plant which utilizes the advanced gas turbine combine cycle without the SOFC (i.e., consisting of an IGCC). The resulting ROM plant cost estimates are summarized in Table 1-8 and shows a total installed plant cost of $1268/kW utilizing the above derived SOFC system cost. It should be noted that the Base Case plant utilized the partially steam cooled G technology gas turbine while higher plant efficiency and lower total plant cost may be expected with the H technology gas turbine for the IGCC. In addition, as the firing temperature is further increased, even greater improvements in the plant economics may be expected for the IGCC option. Thus, as further advances in gas turbine technology are made with respect to firing temperature due to improvements in materials and cooling technology, the required SOFC system cost will have to be < $400/kW to be competitive on a cost of electricity basis with the IGCC. Note that no economic credit has been given to the SOFC based plant for its lower CO_2 emission on a kW basis resulting from its lower heat rate.

Coal Based "Zero Emission" Plant with Vision 21 Technology

Process Description

As depicted in Figure 1-6, this plant applies Vision 21 technology and the major features of this configuration include an O_2 blown ATR, the O_2 being supplied by an ion or O_2 transport membrane (ITM / OTM) unit (Richards, 2001; Armstrong), separate SOFC anode and cathode exhaust streams, and a shift conversion unit followed by a high temperature H_2 separation membrane, in order to capture the gaseous carbon emissions from the gasifier (95% of the total carbon fed to the gasifier) as CO_2 for sequestration. For comparative purposes, the coal flow rate is set at the same rate as this previous case. The major stream data for this case are summarized Table 1-9 (note that utility and process condensate streams are not shown).

Ground Coal along with ground limestone (both < 500 microns particle size) for in-bed sulfur capture (about 85% of the sulfur is expected to be captured along with over 90% of the chlorine) is added to the upper stage of the mixing zone. The gas exits the top of the gasifier riser and goes to a primary cyclone that is connected to a standpipe that receives the unburned char and ash/bed material for recirculation back to the mixing zone. The overall carbon conversion for this O_2 blown ATR is assumed to be 95% based on information provided by Southern Services Company who operate the Wilsonville process demonstration unit (which is lower than the 98.9% conversion assumed in the previous study documented in the DOE Report "Transport Gasifier IGCC Base Cases," PED-IGCC-98-006, June 2000).

Ash withdrawn from the ATR has very little carbon in it and its MMD is about 150 microns (coarse ash) and has the consistency/appearance of beach sand. It could be utilized as bed material for a fluidized bed unit. The ash withdrawn from the particulate control device or PCD (filter vessel) has an MMD of about 15 microns (fine ash or char) and typically has 30% carbon and a BTU value of about 5500 Btu/lb. This fine ash or char is in powdery form and is not in a vitrified state. More than 95% of CaS is present in the fine ash. Based on data collected at the Wilsonville PDU, the reactive CaS content of the fine ash has not exceeded 500 ppm (when the reactive CaS exceeds 500 ppm, the ash is considered as hazardous).

The syngas leaves the gasifier at approximately 1050C based again on information provided by Southern Services Company (which is higher than the 900 C assumed in the previously mentioned DOE Report," PED-IGCC-98-006). The syngas is cooled to 400C by generating superheating steam. It then goes to a barrier filter where over 99.99% of the remaining particulates are removed. Next the syngas is fed to the chloride guard bed consisting of nahcolite, which also removes any other remaining halides. From the chloride guard which is followed by another barrier filter, the fuel gas goes to a zinc titinate bed for sulfur removal and the to the final particulate filter.

A fraction of the syngas is utilized as transport gas for feeding the solids to the ATR. The required amount of gas is first cooled in a series of heat exchangers while providing heat for high pressure steam generation and for the humidifier. The syngas is next further cooled against cooling water and then compressed to the required pressure. A closed loop CO_2 system provides the gas required for pressurization of the lock hoppers, while the required make-up CO_2 is supplied from the captured CO_2.

The remainder of the clean syngas is passed through a fixed bed reactor containing the Amended Silicates^{TM} sorbent where the mercury is chemisorbed. The clean syngas is combined with steam and then fed to a fixed bed reactor containing a methanation catalyst followed by a turbo-expander as depicted in Figure 1-5. The methanation / shift reactions that occur within the reactor serve to (1) producing additional methane (in addition to that generated within the ATR) and (2) raising the temperature of the syngas (from 372C to 716C). The increased methane content of the syngas assists in providing a heat sink for the heat generated within the SOFC while the increased temperature of the syngas increases the power developed by the turbo-expander which expands the syngas from a pressure of 2,310 kPa to 1,880 kPa. It also reduces the amount of heat exchange required within the SOFC system. Steam is added to the syngas upstream of the shift / membrane unit to avoid carbon deposition within that unit as well as in the downstream methanation reactor and in the reformer located within the SOFC stack.

A chloride guard bed consisting of Na on alumina followed by a sulfur guard bed consisting of alternating layers of COS hydrolysis catalyst such as a Co Mo or a Ni MO catalyst and ZnO for the H_2S capture ("purple sandwich") may be included upstream of the methanator as a final cleanup step to remove any trace amounts of the chlorides and sulfur compounds to the level required by the methanation catalyst (and the reforming catalyst within the SOFC system) of 0.1 ppmV for each of these impurities.

The methanated / expanded syngas after being preheated and reformed within the SOFC module is fed to the anode side of the cells. Compressed air supplied by the gas turbine, at approximately 1,880 kPa, is heated in a regenerator against the cathode exhaust gas within the SOFC module and then supplied to the central injection tubes of the tubular fuel cells for further preheat prior to entering the cathode side of the cells. The gas turbine also provides the small quantity of pressurized air required by the warm gas cleanup unit.

The anode exhaust gas after heat recovery is fed to a shift unit where the remaining CO is converted to CO_2 while generating H_2. The shifted gas, now mainly CO_2 with the H_2 formed and residual CO content goes to a H_2 membrane separator to capture the H_2 (Roark 2003) which is compressed and recycled to the SOFC. Alternately, a shift / membrane unit can be utilized. The non-permeate is fed to a catalytic combustor using O_2 from the ITM oxygen plant to fully remove the small amounts of any remaining CO and H_2, leaving CO_2, H_2O, and a very small amount of O_2 in the stream. This stream is cooled and then pressurized (and dehydrated) to 15,200 kPa.

A fraction of the hot depleted air exiting the SOFC is preheated to about 800C, the temperature required by the ITM (or OTM) unit for air separation by directly combusting in it a small fraction of the recovered H_2, while the remainder of the SOFC exhaust is bypassed in order to minimize the fuel (H_2) used in preheating the feed gas to the ITM / OTM unit. In the ITM / OTM unit, O_2 is removed from the already vitiated air and exits the unit at sub-atmospheric pressure. The O_2, assumed to be 100%, is cooled and compressed to gasifier pressure with a small side stream going to the catalytic "cleanup" for oxidizing combustibles remaining in the CO_2 stream. The non-permeate from the ITM / OTM, now reduced in mass flow and slightly in pressure, is combined with the fraction of the cathode exhaust air that bypassed the ITM / OTM

and is then expanded in the gas turbine while exhausting to an HRSG. The gas turbine output is significantly reduced because of its low firing temperature, around 750C and the reduced flow.

The gasifier O_2 after compression is humidified in a counter current packed column utilizing process condensate and is then sent to the mixing zone of the ATR gasifier. The humidification operation generates the entire steam required for the ATR while reducing the amount of waste-water to be treated.

The bottoming cycle in the power block consists of the gas turbine followed by a non-reheat steam cycle. High pressure (HP) superheated steam at 10,880 kPa and 538C is supplied to the steam turbine while intermediate pressure (IP) steam at 2,600 kPa is extracted from the steam turbine for addition to the syngas upstream of the methanator for carbon control while low pressure (LP) steam at 470 kPa is extracted for the coal drying operation. Char and purged bed material are fed to the sulfator that combusts the char while oxidizing the sulfides. The heat generated is recovered by producing high pressure steam as well as preheating the combustion air required by the sulfator.

Performance Estimates

The plant consumes 2241 MT / D of the bituminous coal while producing 349 MW of electric power and capturing 95% of the CO_2 evolved. The calculated current density for the SOFC at a cell voltage of 0.75V was 164 mA/cm^2 based on the material properties used in the SOFC model (derived from data found in literature consistent with performance predictions made for a Siemens-Westinghouse tubular SOFC of the mid 1990s vintage as indicated in Appendix A). The resulting net thermal efficiency of the plant at 49.6% (HHV) is significantly higher than the Zero Emission case utilizing nearer term technology which resulted in an efficiency of approximately 33% (HHV). The overall plant performance is summarized in Table 1-10.

Coal Based H_2 Coproduction with CO_2 Capture

Process Description

The DOE has made announcements regarding the building of a FutureGen plant, one that coproduces H_2 while recovering the CO_2. H_2 is being touted as the clean transportation fuel of the future for automobiles powered by fuel cells. Thus, this case is included in the analysis in order to quantify the coproduction of merchant grade H_2 while all emissions including CO_2 are controlled. This coproduction plant should be able to duty cycle between fuel production versus power while taking advantage of other synergies of coproduction such as energy integration.

As depicted in Figure 1-7, this plant applies Vision 21 technology and the major features of this configuration include a shift conversion and high temperature H_2 separation membranes upstream of the SOFC system and a H_2 compression system. 95% of the CO_2 is also removed as in the previously described Zero Emission Plant with V21 Technology. For comparative purposes, the coal flow rate is set at the same rate as this previous cases. The major stream data for this case are summarized Table 1-11 (note that utility and process condensate streams are not shown).

Ground Coal along with ground limestone (both < 500 microns particle size) for in-bed sulfur

capture (about 85% of the sulfur is expected to be captured along with over 90% of the chlorine) is added to the upper stage of the mixing zone. The gas exits the top of the gasifier riser and goes to a primary cyclone that is connected to a standpipe that receives the unburned char and ash/bed material for recirculation back to the mixing zone. The overall carbon conversion for this O_2 blown ATR is assumed to be 95% based on information provided by Southern Services Company who operate the Wilsonville process demonstration unit (which is lower than the 98.9% conversion assumed in the previous study documented in the DOE Report "Transport Gasifier IGCC Base Cases," PED-IGCC-98-006, June 2000).

Ash withdrawn from the ATR has very little carbon in it and its MMD is about 150 microns (coarse ash) and has the consistency/appearance of beach sand. It could be utilized as bed material for a fluidized bed unit. The ash withdrawn from the particulate control device or PCD (filter vessel) has an MMD of about 15 microns (fine ash or char) and typically has 30% carbon and a BTU value of about 5500 Btu/lb. This fine ash or char is in powdery form and is not in a vitrified state. More than 95% of CaS is present in the fine ash. Based on data collected at the Wilsonville PDU, the reactive CaS content of the fine ash has not exceeded 500 ppm (when the reactive CaS exceeds 500 ppm, the ash is considered as hazardous).

The syngas leaves the gasifier at approximately 1050C based again on information provided by Southern Services Company (which is higher than the 900 C assumed in the previously mentioned DOE Report," PED-IGCC-98-006). The syngas is cooled to 333C by generating superheating steam which is lower than the previous two cases. The syngas is cooled to this lower temperature in order to stay within the temperature limits of commercially available high temperature sweet shift catalysts (note that a temperature rise occurs within the shift unit located downstream of the guard beds which remove the halides and sulfur compounds). The syngas then goes to a barrier filter where over 99.99% of the remaining particulates are removed. Next the syngas is fed to chloride guard bed consisting of nahcolite, which also removes any other remaining halides. From the chloride guard which is followed by another barrier filter, the fuel gas goes to a zinc titinate bed for sulfur removal and the to the final particulate filter.

A fraction of the syngas is utilized as transport gas for feeding the solids to the ATR. The required amount of gas is first cooled in a series of heat exchangers while providing heat for high pressure steam generation and for the humidifier. The syngas is next further cooled against cooling water and then compressed to the required pressure. A closed loop CO_2 system provides the gas required for pressurization of the lock hoppers, while the required make-up CO_2 is supplied from the captured CO_2.

The remainder of the clean syngas is combined with steam and then fed to the shift / membrane unit to form additional H_2 (beyond what is generated within the gasifier) and separate the H_2. Because of the additional pressure drop associated with the shift / membrane unit, the gasifier is operated at a higher pressure than the previous two cases; the syngas leaves the gasifier at 2,948 kPa while in the previous two case, the syngas leaves the gasifier at 2,743 kPa. The recovered H_2 along with some additional H_2 recovered downstream of the fuel cell is cooled while recovering the heat, compressed to 2,810 kPa and supplied to the pipeline for export. The tail gas from the membrane unit consisting primarily of CO, CO_2, a portion of the H_2 that is not separated, H_2O and inerts such as N_2 are fed to a fixed bed reactor containing a methanation catalyst followed by a turbo-expander as depicted in Figure 1-5. The methanation / shift

reactions that occur within the reactor serve to (1) producing additional methane (in addition to that generated within the ATR) and (2) raising the temperature of the syngas (from 500C to 603C). The increased methane content of the syngas assists in providing a heat sink for the heat generated within the SOFC while the increased temperature of the syngas increases the power developed by the turbo-expander which expands the syngas from a pressure of 2,310 kPa to 1,880 kPa. It also reduces the amount of heat exchange required within the SOFC system. Steam added to the syngas upstream of the shift / membrane unit avoids carbon deposition within that unit as well as in the downstream methanation reactor and in the reformer located within the SOFC stack.

A chloride guard bed consisting of Na on alumina followed by a sulfur guard bed consisting of alternating layers of COS hydrolysis catalyst such as a Co Mo or a Ni MO catalyst and ZnO for the H_2S capture ("purple sandwich") may be included upstream of the methanator as a final cleanup step to remove any trace amounts of the chlorides and sulfur compounds to the level required by the methanation catalyst (and the reforming catalyst within the SOFC system) of 0.1 ppmV for each of these impurities.

The methanated / expanded syngas after being preheated and reformed within the SOFC module is fed to the anode side of the cells. Compressed air supplied by the gas turbine, at approximately 1,880 kPa, is heated in a regenerator against the cathode exhaust gas within the SOFC module and then supplied to the central injection tubes of the fuel cells for further preheat prior to entering the cathode side of the cells. The gas turbine also provides the small quantity of pressurized air required by the warm gas cleanup unit.

The anode exhaust gas after heat recovery is fed to a second shift unit where additional H_2 is formed by shifting the remaining CO. The shifted gas, now mainly CO_2 along with the H_2 formed and residual CO content goes to a H_2 membrane separator to capture the additional H_2 for export. Alternately, a shift / membrane unit can be utilized. The non-permeate is fed to a catalytic combustor using O_2 from the ITM (or OTM) plant to fully remove the small amounts of any remaining CO and H_2, leaving CO_2, H_2O, and a very small amount of O_2 in the stream. This stream is cooled and the cooled CO_2 stream is pressurized (and dehydrated) to 15,200 kPa, similar to the previous case.

The hot depleted air exiting the SOFC is preheated to about 800C, the temperature required by the ITM / OTM unit for air separation by directly combusting in it a small fraction of the recovered H_2. In ITM / OTM unit, O_2 is removed from the already vitiated air and exits the unit at sub-atmospheric pressure. The O_2, assumed to be 100%, is cooled and compressed to gasifier pressure with a small side stream going to the catalytic "cleanup" for oxidizing combustibles remaining in the CO_2 stream. The non-permeate from the ITM / OTM, now reduced in mass flow and slightly in pressure, is expanded in the gas turbine and exhausts to an HRSG. The gas turbine output is significantly reduced because of its low firing temperature, essentially 800C and the reduced flow. The air to fuel ratio for the SOFC is increased above that used in the previous two cases in order to provide the required amount of feed gas to the ITM / OTM unit (i.e., increased over twice the stoichiometric amount).

The gasifier O_2 after compression is humidified in a counter current packed column utilizing process condensate and is then sent to the mixing zone of the ATR gasifier. The humidification operation generates the entire steam required for the ATR while reducing the amount of waste-water to be treated.

The bottoming cycle in the power block consists of the gas turbine followed by a non-reheat steam cycle. High pressure (HP) superheated steam at 10,880 kPa and 538C is supplied to the steam turbine while intermediate pressure (IP) steam at 2,600 kPa is extracted from the steam turbine for addition to the syngas upstream of the methanator for carbon control while low pressure (LP) steam at 470 kPa is extracted for the coal drying operation. Char and purged bed material are fed to the sulfator that combusts the char while oxidizing the sulfides. The heat generated is recovered by producing high pressure steam as well as preheating the combustion air required by the sulfator.

Performance Estimates

The plant consumes 2241 MT / D of the bituminous coal while producing 155 MW of electric power, exporting 1.86 x 10^6 nM^3 / D of H_2, and capturing 95% of the CO_2 evolved. The calculated cell current density for the SOFC at a cell voltage of 0.75V was 111 mA/cm^2 based on the material properties used in the SOFC model (derived from data found in literature consistent with performance predictions made for a Siemens-Westinghouse tubular SOFC of the mid 1990s vintage as indicated in Appendix A). The current density for this case is significantly lower than the previous case since a significant portion of the H_2 is removed for export from the anode feed gas in the upstream shift/membrane unit. The overall thermal efficacy of this coproduction facility is 61.1% utilizing the following expression while exporting 39% of the energy content of the coal in the form of H_2 (on an HHV basis):

Thermal efficacy = (net export electric power + HHV contained in exported H_2) / (HHV contained in the total coal feed).

The overall plant performance of this case along with that for an operating scenario where the net power generated is increased by as much as 61% (increased from the 155 MW to 250 MW) while exporting about 50% less H_2 are summarized in Table 1-12. These two operating cases show an estimate of the upper and lower bounds for the relative amounts of H_2 and power that may be produced by a given pant while maximizing the overall plant thermal performance for the set of design constraints chosen for the study and for the set of technologies employed in the configuration as developed for this case. One of these design constraints is that the air flow to the gas turbine can be reduced by a maximum of 20% (air flow to the gas turbine is reduced from 173 kg/s to 216 kg/s going for the high H_2 export case to the low H_2 export case) while a minimum of 100% excess air is utilized in the SOFC (183% excess air is utilized in the SOFC for the high H_2 export case versus 100% excess air for the low H_2 export case while providing the entire amount of the cathode exhaust gas as feed gas to the ITM / OTM unit). Thus, It can be seen from the data that going from the high H_2 (or low power) export scenario to the low H_2 (or high power) export scenario the gas turbine generates 10% less power and the steam turbine generates 12% more power while it is the SOFC that produces most of the additional power. This tends to maintain a high electrical efficiency for the plant at the two operating scenarios since the turndown or part-load characteristics of the SOFC are excellent from a thermal efficiency standpoint. The calculated current density for the low H_2 export case is 144 mA/cm^2 which is higher than the high H_2 export case (when the same cell voltage of 0.75V is maintained) since the anode feed gas for the low H_2 export case has higher concentration of H_2.

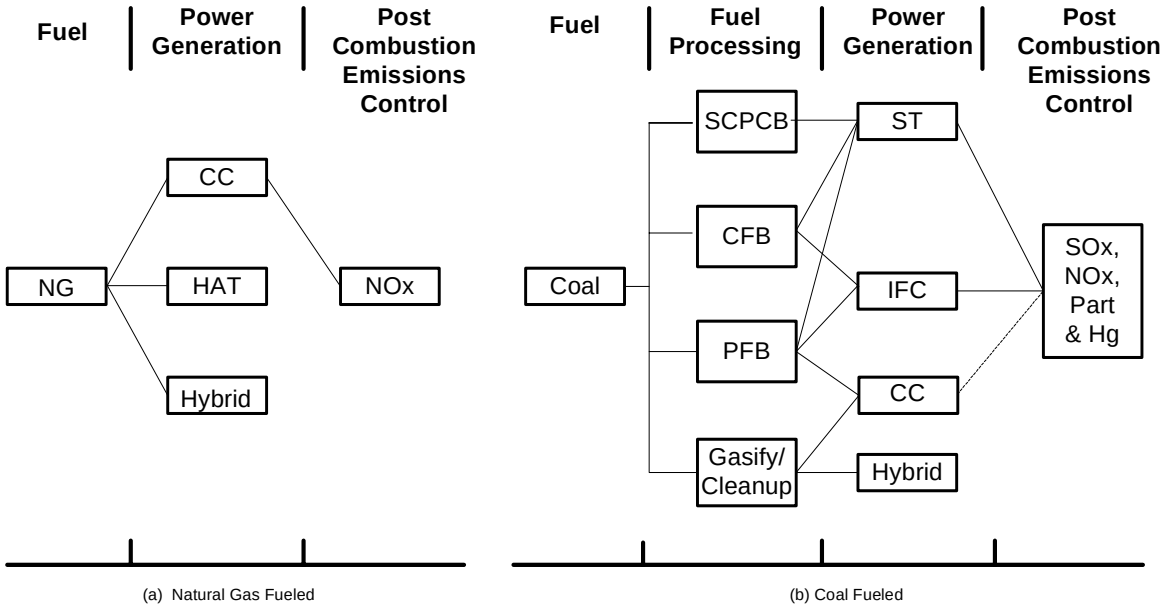

NG = Natural Gas
CC = Gas Turbine based Combined Cycle
ST = Steam Turbine
Hybrid = Fuel Cell Hybrid

SCPCB = Supercritical Pulverized Coal Boiler
CFB = Circulating Fluidized Bed
PFB = Pressurized Fluidized Bed
IFC = Indirectly Fired Cycle

Figure 1 - 1: Sub-system Selection

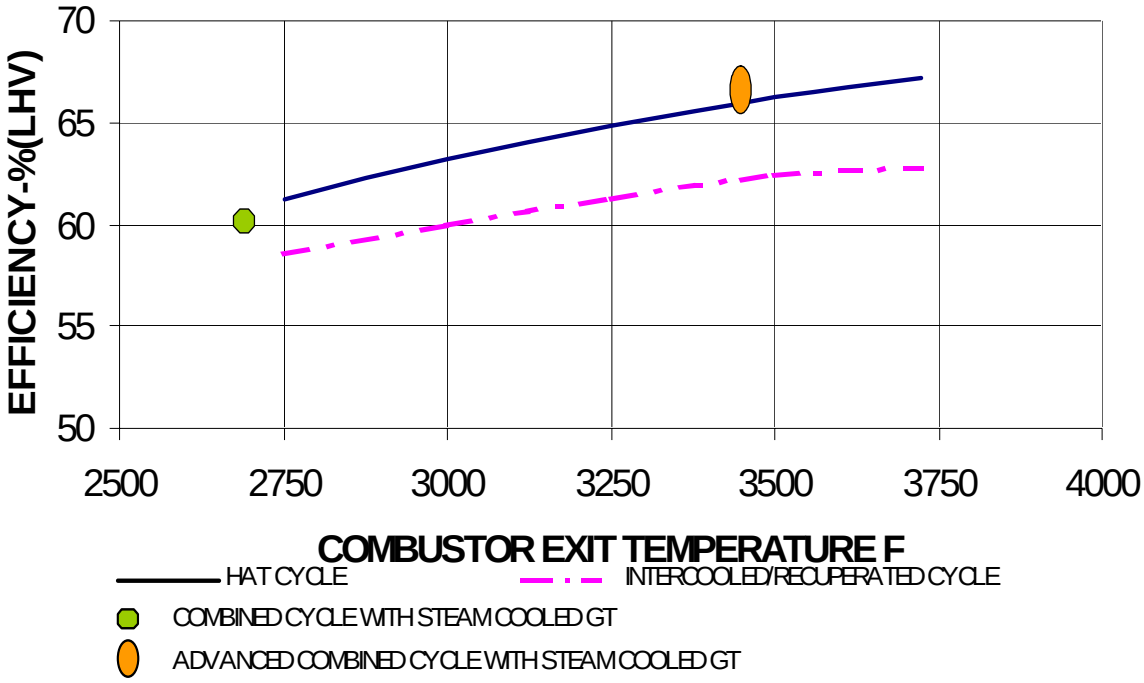

Figure 1 - 2: Thermal Efficiency of Various Gas Turbine based Cycles

Table 1- 1: Gas Turbine Design Basis

Firing Temperature	≤ 1700C
LP Compressor Isentropic Efficiency	90%
HP Compressor Isentropic Efficiency	88%
LP Turbine Isentropic Efficiency	94%
HP Turbine Isentropic Efficiency	92%
Turbine Materials	Ceramics and Thermal Barrier Coatings
Generator Efficiency	98.6%

Table 1- 2: Fuel Cell Design Basis

Overall Fuel Utilization	85%	
Individual Cell Voltage	≤ 0.75V	
Effective Air to Fuel	≅ 2 x Stoichiometric Amount	
Inverter Efficiency	97%	
Cell Geometry	Tubular with Central Injection Air Preheat Tube	
Air Preheat	Against Vitiated Air and within Central Injection Tube	
Fuel Reforming	Internal within Stack	
	Dimension	**Basis**
Tube Length	150 cm	Bessette and George (1996)
Inside Cell Diameter	1.76 cm	Bessette and George (1996)
Inside Diameter of Oxidant Preheat Tube	0.5 x Inside Cell Diameter	Hirano (1992) and correlating data from Bessette and George (1996)
Thickness of Oxidant Preheat Tube	0.17 x Inside Cell Diameter	Hirano (1992) and correlating data from Bessette and George (1996)
Inside Diameter of Cell	1.76 cm	Bessette and George (1996)
Thickness of Substrate Layer (if any)	0.001 cm	Hirschenhofer et al. (1994)
Thickness of Cathode Layer	0.05172 x Inside Cell Diameter + 0.12897 cm	Correlating data from Bessette and George (1996)
Thickness of Electrolyte Layer	0.004 cm	Hirschenhofer et al. (1994)
Thickness of Anode Layer	0.011 cm	By difference from data presented by Bessette and George (1996)
Pitch (distance between center of Tubes)	1.05 x Outside Cell Diameter	Estimated form drawing in Fuel Cell Handbook, Appleby and Foulkes, (1993)

Table 1 - 3: Illinois No. 6 Coal Analysis – "As Received"

	Wt %	Wt % Dry
Moisture	11.12	0
Carbon	63.75	71.72
Hydrogen	4.5	5.06
Nitrogen	1.25	1.41
Chlorine	0.29	0.33
Sulfur	2.51	2.82
Oxygen	6.88	7.75
Ash	9.7	10.91
Total	100	100
HHV, MJ/kg (Btu/lb)	27,139 (11,667)	30,534 (13,127)

Table 1 - 4: Limestone Analysis – "As Received"

	Wt %
Moist	3
CaCO3	77.99
MgCO3	3.4
SiO2	10.01
Al2O3	3.07
Fe2O3	1.2
Na2O	0.22
K2O	0.7
Inerts	0.42
Total	100

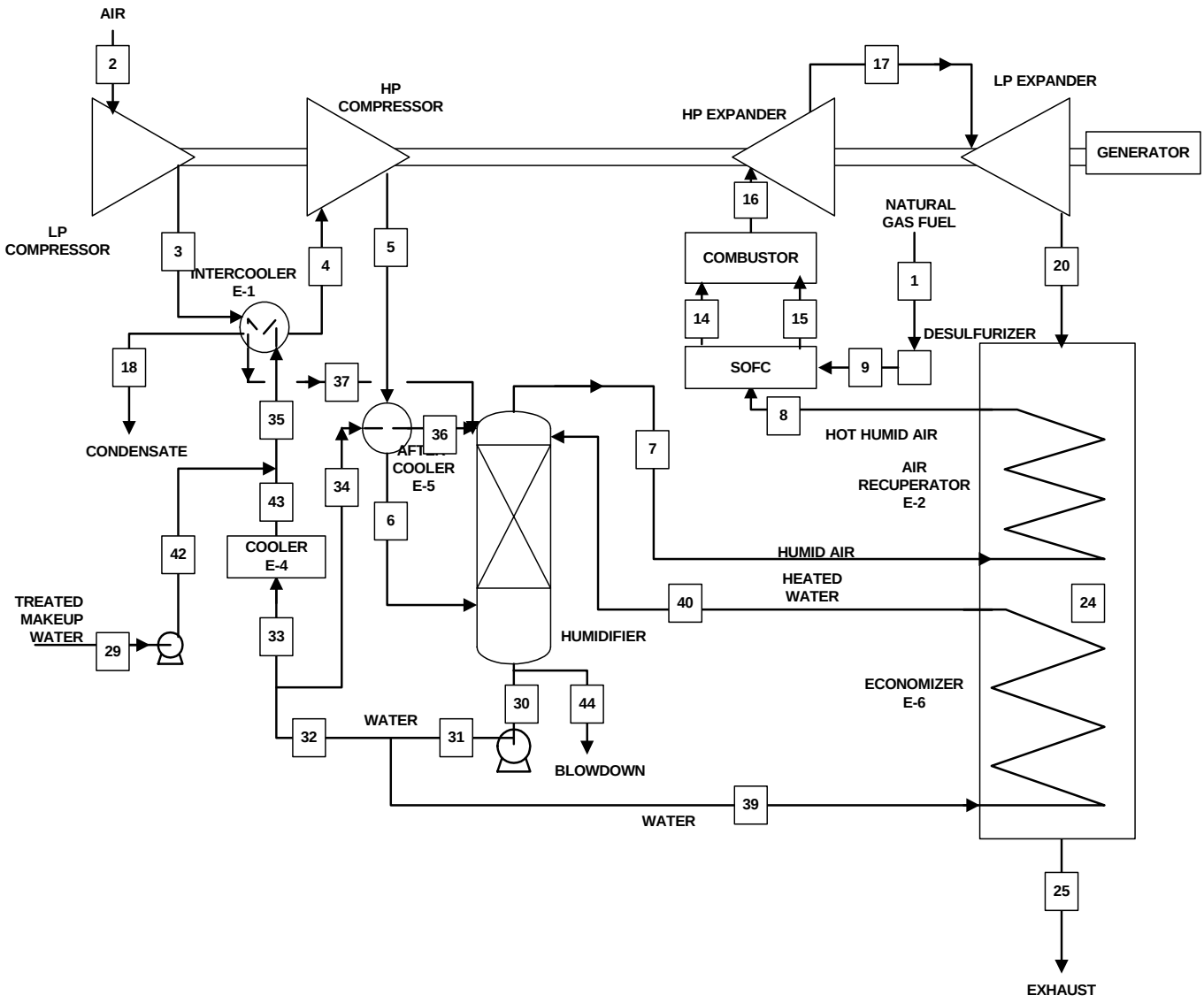

Figure 1 - 3: Cycle Diagram - Natural Gas Based SOFC / HAT Hybrid

Table 1 - 5: State Point and Performance Data - SOFC / HAT Hybrid

COMPOSITION IN MOLE %

Stream No.	1	2	3	4
H2O	0.00	0.99	0.99	0.86
N2	1.60	77.34	77.34	77.44
O2	0.00	20.74	20.74	20.77
CO2	1.00	0.00	0.00	0.00
CH4	93.10	0.00	0.00	0.00
C2H4	3.20	0.00	0.00	0.00
C2H6	0.70	0.00	0.00	0.00
NC4H10	0.40	0.00	0.00	0.00
Ar	0.00	0.93	0.93	0.93
Vapor Flowrate, Kg/s	7.5825	194.1544	194.1544	193.9971
Elemental Flowrates:				
C, Kg/s	5.49	0.00	0.00	0.00
H, Kg/s	1.75	0.13	0.13	0.12
O, Kg/s	0.14	45.73	45.73	45.59
N, Kg/s	0.20	145.79	145.79	145.79
S, Kg/s	0.00	0.00	0.00	0.00
Cl, Kg/s	0.00	0.00	0.00	0.00
Ar, Kg/s	0.00	2.50	2.50	2.50
Total Flowrate, Kg/s	7.5825	194.1544	194.1544	193.9971
Temp, DEG C	15.00	15.00	196.35	29.00
Press, Bar	25.50	1.00	4.90	4.80
Vapor Mol. Wt.	17.17	28.85	28.85	28.87
Vap+Cond Mol. Wt.	17.17	28.85	28.85	28.87
Vapor HHV, J/nM3	40045260.41	0.00	0.00	0.00

Datum for Energy: 15.9C & liquid water
Energy includes Sensible, Latent and HHV

Total Energy, J/s	396005318.05	2768318.98	38692414.25	4915569.41
Total Entropy including Entropy of Formation, J/s/C	67234.32	1334079.98	1341873.59	1251981.91
Exergies, J/s:				
Carnot	0.00	0.00	8215945.33	103129.56
Total Pressure	3356471.61	0.00	25882084.06	25457030.35
Combustion	395222383.52	0.00	0.00	0.00
Partial Pressure	6578481.62	47.90	47.90	0.00
Total	405157336.76	47.90	34098077.28	25560159.91

Stream No.	5	6	7	8
H2O	0.86	0.86	16.17	16.17
N2	77.44	77.44	65.48	65.48
O2	20.77	20.77	17.56	17.56
Ar	0.93	0.93	0.79	0.79
Vapor Flowrate, Kg/s	193.9971	193.9971	216.0976	216.0976
Elemental Flowrates:				
C, Kg/s	0.00	0.00	0.00	0.00
H, Kg/s	0.12	0.12	2.59	2.59
O, Kg/s	45.59	45.59	65.22	65.22
N, Kg/s	145.79	145.79	145.79	145.79
S, Kg/s	0.00	0.00	0.00	0.00
Cl, Kg/s	0.00	0.00	0.00	0.00
Ar, Kg/s	2.50	2.50	2.50	2.50
H2O Condensate, Kg/s	-0.0000	-0.0000	0.0000	0.0000
Other Liquid/Solids Kg/s	0.0000	0.0000	0.0000	0.0000
Total Flowrate, Kg/s	193.9971	193.9971	216.0976	216.0976
Temp, DEG C	198.07	92.00	134.50	280.47
Press, Bar	20.00	19.60	19.21	18.82
Vapor Mol. Wt.	28.87	28.87	27.19	27.19
Vap+Cond Mol. Wt.	28.87	28.87	27.19	27.19

Datum for Energy: 15.9C & liquid water
Energy includes Sensible, Latent and HHV

Total Energy, J/s	38598191.70	16776328.93	84007957.59	121094080.48
Total Entropy including Entropy of Formation, J/s/C	1260668.97	1209219.01	1661002.43	1739870.63
Exergies, J/s:				
Carnot	8655691.99	1937529.70	17592768.33	32121050.09
Total Pressure	48307316.76	47987112.10	48324610.29	48003603.99
Combustion	0.00	0.00	0.00	0.00
Partial Pressure	0.00	0.00	161472.21	161472.21
Total	56963008.75	49924641.80	66078850.83	80286126.28

Stream No.	9	10	11	12
H2	0.00	6.90	0.00	9.23
H2O	0.00	41.36	0.00	55.31
N2	1.60	0.81	0.00	0.54
CO	0.00	5.49	0.00	7.34
CO2	1.00	20.19	0.00	26.66
CH4	93.10	24.16	0.00	0.92
C2H4	3.20	0.81	0.00	0.00
C2H6	0.70	0.18	0.00	0.00
NC4H10	0.40	0.10	0.00	0.00
Vapor Flowrate, Kg/s	7.5825	39.3419	0.0000	63.5115
Elemental Flowrates:				
C, Kg/s	5.49	10.99	0.00	10.99
H, Kg/s	1.75	3.50	0.00	3.51
O, Kg/s	0.14	24.45	0.00	48.62
N, Kg/s	0.20	0.40	0.00	0.40
S, Kg/s	0.00	0.00	0.00	0.00
Cl, Kg/s	0.00	0.00	0.00	0.00
Ar, Kg/s	0.00	0.00	0.00	0.00
H2O Condensate, Kg/s	0.0000	0.0000	0.0000	0.0000
Other Liquid/Solids Kg/s	0.0000	0.0000	0.0000	0.0000
Total Flowrate, Kg/s	7.5825	39.3419	0.0000	63.5115
Temp, DEG C	15.00	695.85	400.00	980.15
Press, Bar	25.00	18.82	30.00	18.45
Vapor Mol. Wt.	17.17	22.46	0.00	24.24
Vap+Cond Mol. Wt.	17.17	22.46	0.00	24.24
Vapor HHV, J/nM3,	40045260.41	11946616.55	0.00	2473690.27

Datum for Energy: 15.9C & liquid water
Energy includes Sensible, Latent and HHV

Total Energy, J/s	396009852.18	551826079.78	0.00	311504791.18
Total Entropy including Entropy of Formation, J/s/C	67318.05	503991.59	0.00	830963.63
Exergies, J/s:				
Carnot	0.00	35116345.34	0.00	79019690.78
Total Pressure	3336877.78	7318094.90	0.00	8294739.83
Combustion	395222383.52	462376776.15	0.00	136134509.82
Partial Pressure	6578481.62	14124561.54	0.00	16083799.58
Total	405137742.92	518935777.93	0.00	239532740.01

Stream No.	13	14	15	16
H2	9.23	9.23	0.00	0.00
H2O	55.31	55.31	17.87	25.67
N2	0.54	0.54	72.35	62.08
O2	0.00	0.00	8.91	6.05
CO	7.34	7.34	0.00	0.00
CO2	26.66	26.66	0.00	5.45
CH4	0.92	0.92	0.00	0.00
Ar	0.00	0.00	0.87	0.75
Vapor Flowrate, Kg/s	31.7557	31.7557	191.9404	223.6961
Elemental Flowrates:				
C, Kg/s	5.50	5.50	0.00	5.50
H, Kg/s	1.75	1.75	2.59	4.34
O, Kg/s	24.31	24.31	41.06	65.38
N, Kg/s	0.20	0.20	145.79	145.98
S, Kg/s	0.00	0.00	0.00	0.00
Cl, Kg/s	0.00	0.00	0.00	0.00
Ar, Kg/s	0.00	0.00	2.50	2.50
Total Flowrate, Kg/s (lb/s)	31.7557	31.7557	191.9404	223.6961
Temp, DEG C (F)	980.15	980.15	479.90	798.34
Press, Bar (PSIA)	18.45	18.45	18.45	18.08
Vapor Mol. Wt.	24.24	24.24	26.69	26.65
Vap+Cond Mol. Wt.	24.24	24.24	26.69	26.65
Vapor HHV, J/nM3,	2473690.27	2473690.27	0.00	0.00

Datum for Energy: 15.9C or 60F & liquid water
Energy includes Sensible, Latent and HHV

Total Energy, J/s	155752395.59	155752395.59	160934648.07	316210543.62
Total Entropy including Entropy of Formation, J/s/C	415481.81	415481.81	1648425.06	2161216.58
Exergies, J/s:				
Carnot	39509845.39	39509845.39	56090828.33	141057630.78
Total Pressure	4147369.91	4147369.91	42295060.51	44324413.19
Combustion	68067254.91	68067254.91	0.00	0.00
Partial Pressure	8041899.79	8041899.79	143175.42	6160343.40
Total	119766370.00	119766370.00	98529064.26	191542387.37

Stream No.	17	18	19	20
H2O	25.67	100.00	25.67	25.67
N2	62.08	0.00	62.08	62.08
O2	6.05	0.00	6.05	6.05
CO2	5.45	0.00	5.45	5.45
Ar	0.75	0.00	0.75	0.75
Vapor Flowrate, Kg/s	223.6961	0.0000	223.6961	223.6961
Elemental Flowrates:				
C, Kg/s	5.50	0.00	5.50	5.50
H, Kg/s	4.34	0.02	4.34	4.34
O, Kg/s	65.38	0.14	65.38	65.38
N, Kg/s	145.98	0.00	145.98	145.98
S, Kg/s	0.00	0.00	0.00	0.00
Cl, Kg/s	0.00	0.00	0.00	0.00
Ar, Kg/s	2.50	0.00	2.50	2.50
H2O Condensate, Kg/s	0.0000	0.1573	0.0000	0.0000
Total Flowrate, Kg/s	223.6961	0.1573	223.6961	223.6961
Temp, DEG C	686.63	29.00	686.63	296.47
Press, Bar	10.80	4.80	10.80	1.05
Vapor Mol. Wt.	26.65	18.02	26.65	26.65
Vap+Cond Mol. Wt.	26.65	18.02	26.65	26.65

Datum for Energy: 15.9C & liquid water
Energy includes Sensible, Latent and HHV

Total Energy, J/s	282311419.45	8868.77	282311419.45	169987239.33
Total Entropy including Entropy of Formation, J/s/C	2163766.91	30.07	2163766.91	2176812.79
Exergies, J/s:				
Carnot	114088127.34	216.48	114088127.34	32778217.12
Total Pressure	36641360.88	44.14	36641360.88	741469.77
Combustion	0.00	0.00	0.00	0.00
Partial Pressure	6160343.40	0.00	6160343.40	6160343.40
Total	156889831.62	260.61	156889831.62	39680030.29

Stream No.	21	22	23	24
H2O	25.67	25.67	12.29	25.67
N2	62.08	62.08	75.46	62.08
O2	6.05	6.05	2.41	6.05
CO2	5.45	5.45	8.94	5.45
Ar	0.75	0.75	0.91	0.75
Vapor Flowrate, Kg/s	1.1185	222.5777	8.0538	222.5777
Elemental Flowrates:				
C, Kg/s	0.03	5.47	0.30	5.47
H, Kg/s	0.02	4.32	0.07	4.32
O, Kg/s	0.33	65.05	1.59	65.05
N, Kg/s	0.73	145.25	5.99	145.25
S, Kg/s	0.00	0.00	0.00	0.00
Cl, Kg/s	0.00	0.00	0.00	0.00
Ar, Kg/s	0.01	2.49	0.10	2.49
Total Flowrate, Kg/s	1.1185	222.5777	8.0538	222.5777
Temp, DEG C	296.47	296.47	49.58	158.12
Press, Bar	1.05	1.05	1.01	1.03
Vapor Mol. Wt.	26.65	26.65	28.42	26.65

Datum for Energy: 15.9C liquid water
Energy includes Sensible, Latent and HHV

Total Energy, J/s	849936.20	169137303.14	1831554.55	131970628.46
Total Entropy including Entropy of Formation, J/s/C	10884.06	2165928.73	62291.97	2092654.23
Exergies, J/s:				
Carnot	163891.09	32614326.03	111822.23	16751298.42
Total Pressure	3707.35	737762.42	6511.26	411219.00
Combustion	0.00	0.00	0.00	0.00
Partial Pressure	30801.72	6129541.69	358893.81	6129541.69
Total	198400.15	39481630.14	477227.30	23292059.11

Stream No.	25	26	27	28
H2O	25.67	25.67	0.88	14.67
N2	62.08	62.08	77.43	66.66
O2	6.05	6.05	20.76	17.88
CO2	5.45	5.45	0.00	0.00
Ar	0.75	0.75	0.93	0.80
Vapor Flowrate, Kg/s (lb/s)	222.5777	223.6961	194.0190	213.5451
Elemental Flowrates:				
C, Kg/s (lb/s)	5.47	5.50	0.00	0.00
H, Kg/s (lb/s)	4.32	4.34	0.12	2.31
O, Kg/s (lb/s)	65.05	65.38	45.61	62.97
N, Kg/s (lb/s)	145.25	145.98	145.79	145.77
S, Kg/s (lb/s)	0.00	0.00	0.00	0.00
Cl, Kg/s (lb/s)	0.00	0.00	0.00	0.00
Ar, Kg/s (lb/s)	2.49	2.50	2.50	2.50
Ash, Kg/s (lb/s)	0.00	0.00	0.00	0.00
H2O Condensate, Kg/s (lb/s)	0.0000	0.0000	0.0000	0.0000
Other Liquid/Solids Kg/s (lb/s)	0.0000	0.0000	0.0000	0.0000
Total Flowrate, Kg/s (lb/s)	222.5777	223.6961	194.0190	213.5451
Temp, DEG C (F)	103.00	103.68	98.00	131.78
Press, Bar (PSIA)	1.02	1.02	19.60	19.21
Vapor Mol. Wt.	26.65	26.65	28.86	27.35
Vap+Cond Mol. Wt.	26.65	26.65	28.86	27.35
Vapor HHV, J/nM3, (Btu/Scf)	0.00	0.00	0.00	0.00
Liquid/Solid HHV J/kg (Btu/lb)	0.00	0.00	0.00	0.00

Datum for Energy: 15.9C or 60F & liquid water
Energy includes Sensible, Latent and HHV

Total Energy, J/s (Btu/s)	117443543.08	118211063.81	18033369.51	76662875.14
Total Entropy including Entropy of Formation, J/s/C (Btu/s/F)	2057400.69	2068210.28	1212921.79	1611117.55
Exergies, J/s (Btu/s):				
Carnot	12595391.94	12698780.27	2204781.99	15632781.20
Total Pressure	248565.51	249814.58	48000917.20	48315420.66
Combustion	0.00	0.00	0.00	-0.00
Partial Pressure	6129541.69	6160343.40	0.00	161452.85
Total	18973499.14	19108938.26	50205699.20	64109654.71

Stream No.	29	30	31	32
H2O	100.00	100.00	100.00	100.00
Vapor Flowrate, Kg/s (lb/s)	0.0000	0.0000	0.0000	0.0000
Elemental Flowrates:				
C, Kg/s (lb/s)	0.00	0.00	0.00	0.00
H, Kg/s (lb/s)	2.37	17.19	17.19	9.45
O, Kg/s (lb/s)	18.81	136.39	136.39	75.01
N, Kg/s (lb/s)	0.00	0.00	0.00	0.00
S, Kg/s (lb/s)	0.00	0.00	0.00	0.00
Cl, Kg/s (lb/s)	0.00	0.00	0.00	0.00
Ar, Kg/s (lb/s)	0.00	0.00	0.00	0.00
Ash, Kg/s (lb/s)	0.00	0.00	0.00	0.00
H2O Condensate, Kg/s (lb/s)	21.1734	153.5655	153.5655	84.4610
Other Liquid/Solids Kg/s (lb/s)	0.0000	0.0000	0.0000	0.0000
Total Flowrate, Kg/s (lb/s)	21.1734	153.5655	153.5655	84.4610
Temp, DEG C (F)	15.00	79.35	79.41	79.41
Press, Bar (PSIA)	1.01	19.60	23.16	23.16
Vapor Mol. Wt.	18.02	18.02	18.02	18.02
Vap+Cond Mol. Wt.	18.02	18.02	18.02	18.02
Vapor HHV, J/nM3, (Btu/Scf)	0.00	0.00	0.00	0.00
Liquid/Solid HHV J/kg (Btu/lb)	0.00	0.00	0.00	0.00
Datum for Energy: 15.9C or 60F & liquid water				
Energy includes Sensible, Latent and HHV				
Total Energy, J/s (Btu/s)	-50441.25	41179344.24	41260211.15	22693116.13
Total Entropy including Entropy of Formation, J/s/C (Btu/s/F)	-152.43	128324.22	128440.98	70642.54
Exergies, J/s (Btu/s):				
Carnot	0.00	4031172.81	4038586.59	2221222.63
Total Pressure	16.11	210952.82	251335.69	138234.63
Combustion	0.00	0.00	0.00	0.00
Partial Pressure	0.00	0.00	0.00	0.00
Total	16.11	4242125.64	4289922.28	2359457.25

Stream No.	33	34	35	36
H2O	100.00	100.00	100.00	100.00
Vapor Flowrate, Kg/s (lb/s)	0.0000	0.0000	0.0000	0.0000
Elemental Flowrates:				
C, Kg/s (lb/s)	0.00	0.00	0.00	0.00
H, Kg/s (lb/s)	3.31	6.14	5.68	6.14
O, Kg/s (lb/s)	26.25	48.76	45.06	48.76
N, Kg/s (lb/s)	0.00	0.00	0.00	0.00
S, Kg/s (lb/s)	0.00	0.00	0.00	0.00
Cl, Kg/s (lb/s)	0.00	0.00	0.00	0.00
Ar, Kg/s (lb/s)	0.00	0.00	0.00	0.00
Ash, Kg/s (lb/s)	0.00	0.00	0.00	0.00
H2O Condensate, Kg/s (lb/s)	29.5614	54.8997	50.7348	54.8997
Other Liquid/Solids Kg/s (lb/s)	0.0000	0.0000	0.0000	0.0000
Total Flowrate, Kg/s (lb/s)	29.5614	54.8997	50.7348	54.8997
Temp, DEG C (F)	79.41	79.41	16.91	172.75
Press, Bar (PSIA)	23.16	23.16	22.70	22.70
Vapor Mol. Wt.	18.02	18.02	18.02	18.02
Vap+Cond Mol. Wt.	18.02	18.02	18.02	18.02
Vapor HHV, J/nM3, (Btu/Scf)	0.00	0.00	0.00	0.00
Liquid/Solid HHV J/kg (Btu/lb)	0.00	0.00	0.00	0.00
Datum for Energy: 15.9C or 60F & liquid water				
Energy includes Sensible, Latent and HHV				
Total Energy, J/s (Btu/s)	7942590.65	14750525.49	364819.35	36558496.66
Total Entropy including Entropy of Formation, J/s/C (Btu/s/F)	24724.89	45917.65	1034.73	100747.51
Exergies, J/s (Btu/s):				
Carnot	777427.92	1443794.71	1332.97	7452752.06
Total Pressure	48382.12	89852.51	81300.06	87974.09
Combustion	0.00	0.00	0.00	0.00
Partial Pressure	0.00	0.00	0.00	0.00
Total	825810.04	1533647.21	82633.03	7540726.15

Stream No.	37	38	39	40
H2O	100.00	100.00	100.00	100.00
Vapor Flowrate, Kg/s (lb/s)	0.0000	0.0000	0.0000	0.0000
Elemental Flowrates:				
C, Kg/s (lb/s)	0.00	0.00	0.00	0.00
H, Kg/s (lb/s)	5.68	11.82	7.73	7.73
O, Kg/s (lb/s)	45.06	93.82	61.38	61.38
N, Kg/s (lb/s)	0.00	0.00	0.00	0.00
S, Kg/s (lb/s)	0.00	0.00	0.00	0.00
Cl, Kg/s (lb/s)	0.00	0.00	0.00	0.00
Ar, Kg/s (lb/s)	0.00	0.00	0.00	0.00
Ash, Kg/s (lb/s)	0.00	0.00	0.00	0.00
H2O Condensate, Kg/s (lb/s)	50.7348	105.6345	69.1045	69.1045
Other Liquid/Solids Kg/s (lb/s)	0.0000	0.0000	0.0000	0.0000
Total Flowrate, Kg/s (lb/s)	50.7348	105.6345	69.1045	69.1045
Temp, DEG C (F)	174.32	173.54	79.41	129.39
Press, Bar (PSIA)	22.24	22.24	23.16	22.70
Vapor Mol. Wt.	18.02	18.02	18.02	18.02
Vap+Cond Mol. Wt.	18.02	18.02	18.02	18.02
Vapor HHV, J/nM3, (Btu/Scf)	0.00	0.00	0.00	0.00
Liquid/Solid HHV J/kg (Btu/lb)	0.00	0.00	0.00	0.00
Datum for Energy: 15.9C or 60F & liquid water				
Energy includes Sensible, Latent and HHV				
Total Energy, J/s (Btu/s)	34133124.65	70704445.78	18567095.02	33123878.33
Total Entropy including Entropy of Formation, J/s/C (Btu/s/F)	93876.53	194656.29	57798.44	96545.11
Exergies, J/s (Btu/s):				
Carnot	7011464.11	14469184.99	1817363.97	5250129.22
Total Pressure	79598.87	165732.11	113101.06	110736.62
Combustion	0.00	0.00	0.00	0.00
Partial Pressure	0.00	0.00	0.00	0.00
Total	7091062.98	14634917.09	1930465.03	5360865.84

Stream No.	41	42	43	44
H2O	100.00	100.00	100.00	100.00
Vapor Flowrate, Kg/s (lb/s)	0.0000	0.0000	0.0000	0.0000
Elemental Flowrates:				
C, Kg/s (lb/s)	0.00	0.00	0.00	0.00
H, Kg/s (lb/s)	19.55	2.37	3.31	0.01
O, Kg/s (lb/s)	155.19	18.81	26.25	0.09
N, Kg/s (lb/s)	0.00	0.00	0.00	0.00
S, Kg/s (lb/s)	0.00	0.00	0.00	0.00
Cl, Kg/s (lb/s)	0.00	0.00	0.00	0.00
Ar, Kg/s (lb/s)	0.00	0.00	0.00	0.00
Ash, Kg/s (lb/s)	0.00	0.00	0.00	0.00
H2O Condensate, Kg/s (lb/s)	174.7389	21.1734	29.5614	0.1053
Other Liquid/Solids Kg/s (lb/s)	0.0000	0.0000	0.0000	0.0000
Total Flowrate, Kg/s (lb/s)	174.7389	21.1734	29.5614	0.1053
Temp, DEG C (F)	154.52	15.37	18.00	79.35
Press, Bar (PSIA)	16.37	23.53	22.70	19.60
Vapor Mol. Wt.	18.02	18.02	18.02	18.02
Vap+Cond Mol. Wt.	18.02	18.02	18.02	18.02
Vapor HHV, J/nM3, (Btu/Scf)	0.00	0.00	0.00	0.00
Liquid/Solid HHV J/kg (Btu/lb)	0.00	0.00	0.00	0.00
Datum for Energy: 15.9C or 60F & liquid water				
Energy includes Sensible, Latent and HHV				
Total Energy, J/s (Btu/s)	102465117.99	17180.82	347422.72	28247.55
Total Entropy including Entropy of Formation, J/s/C (Btu/s/F)	289285.70	-39.95	1067.31	88.03
Exergies, J/s (Btu/s):				
Carnot	19018782.81	20.58	1915.20	2765.24
Total Pressure	198347.41	35232.54	47370.66	144.71
Combustion	0.00	0.00	0.00	0.00
Partial Pressure	0.00	0.00	0.00	0.00
Total	19217130.22	35253.12	49285.86	2909.95

```
Exchanger No. 1
Heat Duty, J/s (Btu/s) -33767976.07

Exchanger No. 2
Heat Duty, J/s (Btu/s)  37086122.89

Exchanger No. 4
Heat Duty, J/s (Btu/s)  -7595167.93

Exchanger No. 5
Heat Duty, J/s (Btu/s) -21821862.77

Exchanger No. 6
Heat Duty, J/s (Btu/s) -14527085.39


Pump/Compressor No., 1
Isentropic Efficiency, %      90.00
Motor, %     100.00
Shaft Power, KW     35924.10
Turbine No., 1
Isentropic Efficiency, %      94.00
Generator, %     100.00
Shaft Power, KW    112324.18
Net Power Generated, KW     76400.08

Pump/Compressor No., 2
Isentropic Efficiency, %      88.00
Motor, %     100.00
Shaft Power, KW     33682.62
Turbine No., 2
Isentropic Efficiency, %      92.00
Generator, %     100.00
Shaft Power, KW     33899.12
Net Power Generated, KW       216.50

Pump/Compressor No., 3
Isentropic Efficiency, %      68.00
Motor, %     100.00
Shaft Power, KW        82.32
Net Power Consumed, KW        82.32

Pump/Compressor No., 4
Isentropic Efficiency, %      68.00
Motor, %     100.00
Shaft Power, KW        67.61
Net Power Consumed, KW        67.61


Fuel Cell No., 5
Per Pass Thermal Efficiency (Fuel LHV to Net AC), %      45.35
Inverter Efficiency, %      97.00
DC Power, KW    198198.95
Net Power Generated, KW    192252.99
Total No. of Tubes =  1016828
Individual Cell Voltage, Volts =  0.68
Current Density, mA/cm2 =  272.307269
DC Power per tube, Watts =  194.918804
Oxidant Temp Entering Air Preheat Tube, DEG C (F) =  769.603593
```

```
Pump/Compressor No., 6
Isentropic Efficiency, %      75.00
Motor, %      95.00
Shaft Power, KW        63.27
Net Power Consumed, KW        66.60

Pump/Compressor No., 7
Isentropic Efficiency, %      80.00
Motor, %      95.00
Shaft Power, KW        79.10
Net Power Consumed, KW        83.26

Humidifier/Dehumidifier Data:
Packing Height, m (ft) =  7.565377
Inside Diameter, m (ft) =  4.195938


Overall Performance Summary
Fuel Input (LHV), MJ/s (MM Btu/s) =  357.67
Net Plant Power Output, KW =  268569.78
Net Plant Thermal Efficiency (LHV), % =   75.09
```

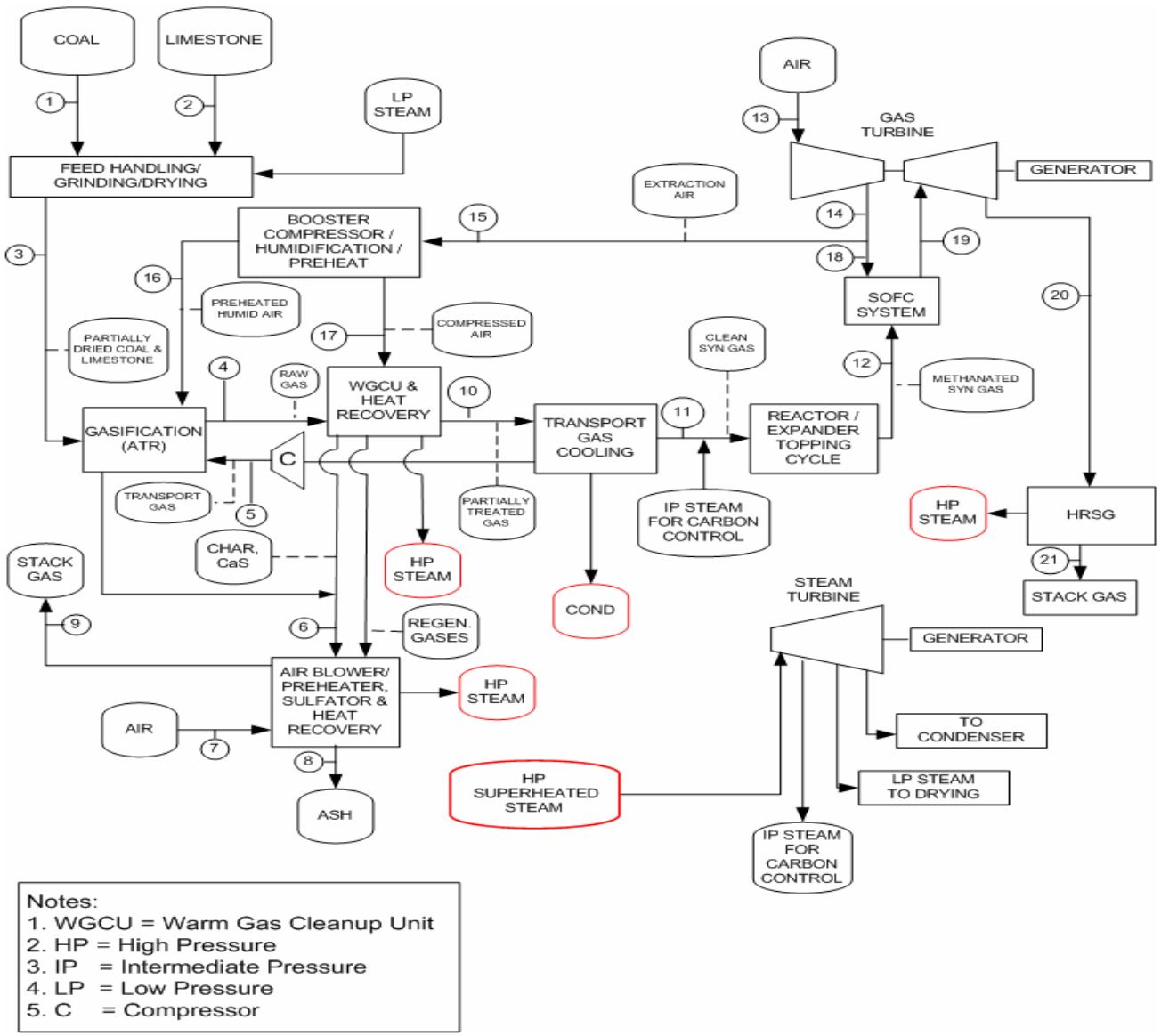

Figure 1 - 4: Block Flow Sketch - Coal Based ATR Gasification SOFC Hybrid

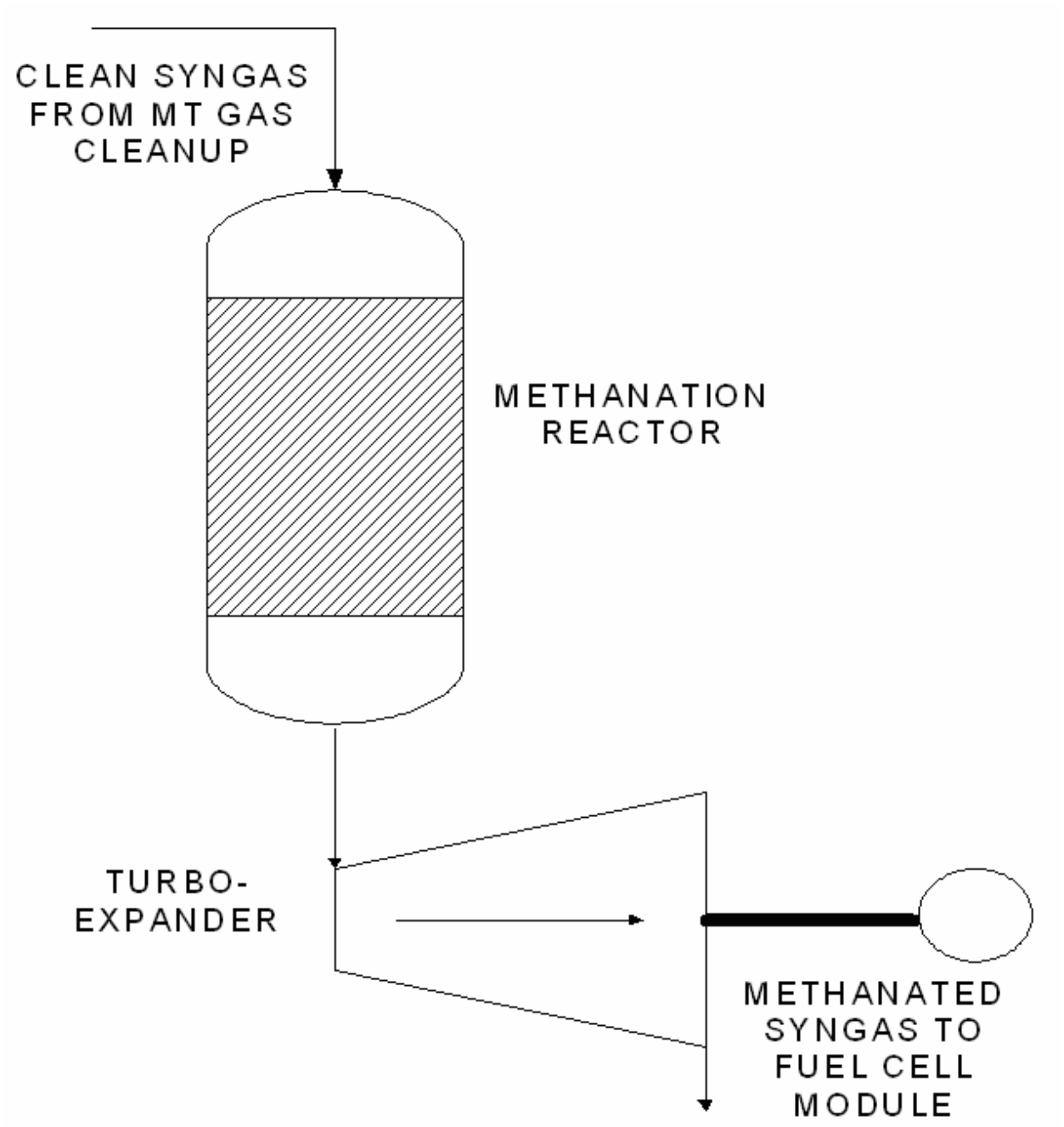

Figure 1 - 5: Reactor / Expander Topping Cycle

Table 1 - 6: Major Stream Data - Coal Based ATR Gasification SOFC Hybrid

UTILITY AND PROCESS CONDENSATE STREAMS NOT INCLUDED IN TABLE

METRIC UNITS - COMPOSITION IN MOLE %

Stream No.	1	2	3	4 (See Note 1 below)
H2	0.00	0.00	0.00	15.06
H2O	0.00	0.00	0.00	6.47
HCl	0.00	0.00	0.00	0.004
N2	0.00	0.00	0.00	46.08
NH3	0.00	0.00	0.00	0.13
CO	0.00	0.00	0.00	21.23
CO2	0.00	0.00	0.00	7.59
H2S	0.00	0.00	0.00	0.063
COS	0.00	0.00	0.00	0.0045
CH4	0.00	0.00	0.00	2.40
Ar	0.00	0.00	0.00	0.55
Vapor Flowrate, Kg/s	0.0000	0.0000	0.0000	110.9835
Solids Kg/s	25.9354	3.8436	28.1000	0.0000
Total Flowrate, Kg/s	25.9354	3.8436	28.1000	107.1182
Temp, DEG C	15.00	15.00	15.00	1052.00
Press, Bar				27.43

Note 1: The concentrations of the sulfur species and HCl are based on the assumption that 85% of the sulfur and 90% of the chlorine entering with the coal will be absorbed by the calcined limestone within the gasifier. Raw syngas may contain trace amounts of HCN and SiO_2. Metal carbonyls have not been reported for this type of gasifier.

Stream No.	5	6	7	8
H2	16.19	0.00	0.00	
H2O	0.17	0.00	0.99	
N2	49.51	0.00	77.34	
O2	0.00	0.00	20.74	
CO	22.81	0.00	0.00	
CO2	8.16	0.00	0.00	
CH4	2.57	0.00	0.00	
Ar	0.59	0.00	0.93	
Vapor Flowrate, Kg/s	5.7896	0.0000	22.6300	0.0000
Solids Kg/s	0.0000	5.1796	0.0000	5.9500
Total Flowrate, Kg/s	5.7896	5.1796	22.6300	5.9500
Temp, DEG C	60.60	400.00	15.00	149.00
Press, Bar	30.48	23.00	1.01	1.01

Stream No.	9	10	11	12
H2		15.16	15.16	12.05
H2O		6.51	6.51	15.25
N2		46.36	46.36	43.03
O2		0.00	0.00	0.00
CO		21.36	21.36	7.73
CO2		7.64	7.64	15.66
CH4		2.41	2.41	5.76
Ar		0.56	0.56	0.52
Vapor Flowrate, Kg/s	21.8596	110.0866	104.0121	115.7928
Temp, DEG C	147.00	400.00	400.00	648.00
Press, Bar	1.01	23.57	23.57	18.82

Stream No.	13	14	15	16
H2O	0.99	0.99	0.99	17.15
N2	77.34	77.34	77.34	64.72
O2	20.74	20.74	20.74	17.35
Ar	0.93	0.93	0.93	0.78
Vapor Flowrate, Kg/s	346.8527	346.8527	74.0000	82.2735
Temp, DEG C	15.00	417.58	417.58	355.00
Press, Bar	1.01	18.82	18.82	30.55

Stream No.	17	18	19	20
H2O	0.20	0.99	13.78	13.78
N2	77.95	77.34	68.35	68.35
O2	20.90	20.74	7.22	7.22
CO2	0.00	0.00	9.83	9.83
Ar	0.94	0.93	0.82	0.82
Vapor Flowrate, Kg/s	0.6553	273.5232	389.3160	389.3160
Temp, DEG C	88.92	417.58	919.80	386.52
Press, Bar	31.17	18.82	16.97	1.05

Stream No.	21
H2O	13.78
N2	68.35
O2	7.22
CO2	9.83
Ar	0.82
Vapor Flowrate, Kg/s	389.3160
Temp, DEG C	125.00
Press, Bar	1.01

Table 1 - 7: Performance Summary - Coal Based ATR based SOFC Hybrid

Coal Feed Rate (as Received), MT / D	2241
MWt (HHV)	703.6
Fuel Cell Power, MW	234.6
Gas Turbine Power, MW	109.8
Steam Turbine Power, MW	86.0
Methanated Syngas Turbo-Expander Power, MW	6.3
Total Gross Power Generated, MW	436.7
Internal Power Consumption, MW	13.9
Net Electric Power (at Generator Terminals), MW	422.8
Overall Thermal Efficiency, % HHV	60.1

Table 1 - 8: ROM Plant Cost Summary - Coal Based ATR based SOFC Hybrid

All costs are in 1000$								Study Case			
	Reference Case Source	Reference Case Capacity	Study Case Capacity	Capacity Units	Reference Case Cost, $	Reference Case Cost Year	2nd Q 2004 Reference Case Cost, $	2nd Q 2004 Cost, $	Process Contingency		2nd Q 2004 Cost
Plant Section									%	$	with Cont. $
Coal Preparation	DOE Report PED-IGCC-98-006 (Air)	2,927	2,479.0	ST/D Coal	16,686	1st Q 1999	18,514	16,482	0	0	16,482
Limestone Receiving/Handlin	DOE Report PED-IGCC-98-006 (Air)	2,927	2,479.0	ST/D Coal	6,809	1st Q 1999	7,555	6,726	0	0	6,726
Transport Gasifier	DOE Report PED-IGCC-98-006 (Air)	2,927	2,479.0	ST/D Coal	57,609	1st Q 1999	63,921	56,903	30	17,071	73,975
Recycle Compression	DOE Report PED-IGCC-98-006 (Air)	2,927	2,479.0	ST/D Coal	1,520	1st Q 1999	1,687	1,501	5	75	1,576
Air Boost Compression	DOE Report PED-IGCC-98-006 (Air)	2,927	2,479.0	ST/D Coal	6,808	1st Q 1999	7,554	6,725	0	0	6,725
Air Humidification	DOE Adv Fossil Power System Comparison	2,244,960	582,210.0	lb/h Air	7,402	1st Q 1999	8,213	3,193	0	0	3,193
Gas Conditioning	DOE Report PED-IGCC-98-006 (Air)	2,927	2,479.0	ST/D Coal	20,216	1st Q 1999	22,431	19,968	15	2,995	22,964
Transport Desulfurizer	DOE Report PED-IGCC-98-006 (Air)	2,927	2,479.0	ST/D Coal	13,565	1st Q 1999	15,051	13,399	15	2,010	15,409
Hg Capture	ADA	75	110.0	kg/s Syngas	3,600	2nd Q 2004	3,600	4,725	15	709	5,434
Reactor - Expander	$400/kW	1	6.3	MW	400	2nd Q 2004	400	1,451	5	73	1,523
SOFC System	$330/kW (Note 1)	1	234.6	MW	330	2nd Q 2004	330	77,418	0	0	77,418
Gas Turbine	DOE Report PED-IGCC-98-006 (Air)	273	109.9	MW	54,136	1st Q 1999	60,067	31,770	5	1,589	33,359
HRSG/Steam Turbine	DOE Report PED-IGCC-98-006 (Air)	97	86.0	MW	34,107	1st Q 1999	37,844	34,786	0	0	34,786
Ash Handling	DOE Report PED-IGCC-98-006 (Air)	2,927	2,479.0	ST/D Coal	4,722	1st Q 1999	5,239	4,664	0	0	4,664
Sulfator	DOE Report PED-IGCC-98-006 (Air)	2,927	2,479.0	ST/D Coal	13,738	1st Q 1999	15,243	13,570	15	2,035	15,605
Subtotal Installed Costs								293,281		26,557	319,838
Demin. Water System	DOE Report PED-IGCC-98-006 (O2)	224,692	203,300.0	lb/h Treated Water	11,452	1st Q 1999	12,707	11,847	0	0	11,847
Civil/Structural/Architectural	DOE Adv Fossil Power System Comparison	4,145	2,479.0	ST/D Coal	32,084	1st Q 1999	35,599	24,841	0	0	24,841
Piping	DOE Adv Fossil Power System Comparison	4,145	2,479.0	ST/D Coal	18,112	1st Q 1999	20,096	14,023	0	0	14,023
Control/Instrumentation	DOE Adv Fossil Power System Comparison	4,145	4,145.0	ST/D Coal (Note 2)	20,699	1st Q 1999	22,967	22,967	0	0	22,967
Electrical	DOE Adv Fossil Power System Comparison	705	437.0	MW Gross Power	45,021	1st Q 1999	49,954	35,741	0	0	35,741
Subtotal Plant Costs								402701		26557	429,257
Engineering Fees @ 10%											42,926
Process Contingency	(Increased Process Contingency for "Transport Gasifier" from 20 to 30% to include syngas cooler to cool gas to 400C)										26,557
Subtotal											69,482
Project Contingency @ 15%											64,389
Total Plant Cost											**536,572**
TPC $/kW											**1,268**

Note 1: Back calculated to obtain same COE as IGCC case. The $330/kW is inclusive of any Process Contingency and amounts to $412/kW when Engineering Fee and Project Contingency are included.
Note 2: Assume same cost as reference case (thus coal rate kept same as reference).

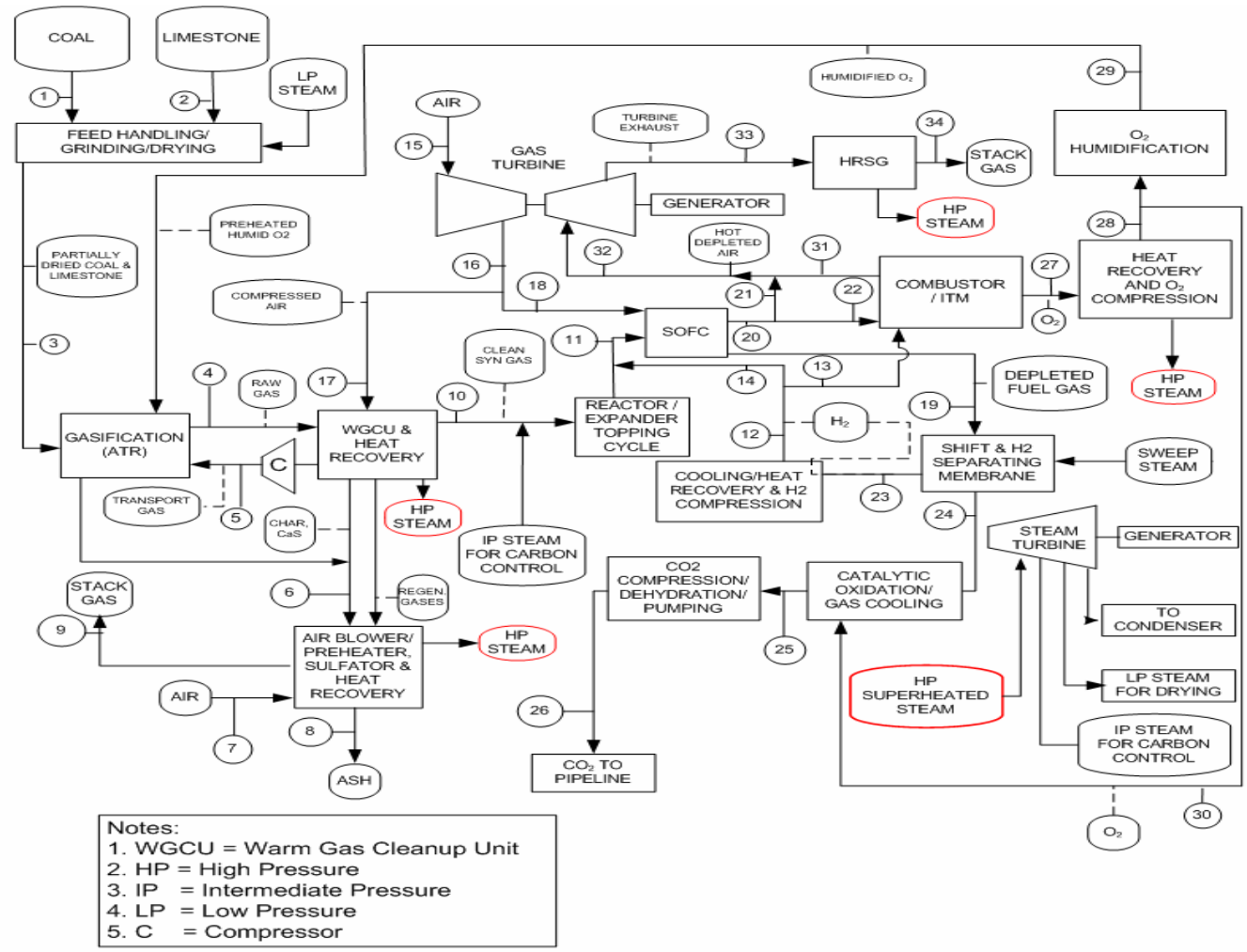

Figure 1 - 6: Block Flow Sketch - Coal Based "Zero Emission" Plant with Vision 21 Technology

Table 1 - 9: Major Stream Data - Coal Based "Zero Emission" Plant with Vision 21 Technology

UTILITY AND PROCESS CONDENSATE STREAMS NOT INCLUDED IN TABLE

METRIC UNITS - COMPOSITION IN MOLE %

Stream No.	1	2	3	4 (See Note 1 below)
H2	0.00	0.00	0.00	30.35
H2O	0.00	0.00	0.00	24.83
HCl	0.00	0.00	0.00	0.006
N2	0.00	0.00	0.00	0.28
NH3	0.00	0.00	0.00	0.17
CO	0.00	0.00	0.00	24.42
CO2	0.00	0.00	0.00	16.39
H2S	0.00	0.00	0.00	0.0855
COS	0.00	0.00	0.00	0.003
CH4	0.00	0.00	0.00	2.90
Vapor Flowrate, Kg/s	0.0000	0.0000	0.0000	68.0684
Solids Kg/s	25.9354	3.8436	28.1000	0.0000
Total Flowrate, Kg/s	25.9354	3.8436	28.1000	68.0684
Temp, DEG C	15.00	15.00	15.00	1052.00
Press, Bar				27.43

Note 1: The concentrations of the sulfur species and HCl are based on the assumption that 85% of the sulfur and 90% of the chlorine entering with the coal will be absorbed by the calcined limestone within the gasifier. Raw syngas may contain trace amounts of HCN and SiO_2. Metal carbonyls have not been reported for this type of gasifier.

Stream No.	5	6	7	8
H2	40.75	0.00	0.00	
H2O	0.17	0.00	0.99	
N2	0.38	0.00	77.34	
O2	0.00	0.00	20.74	
CO	32.79	0.00	0.00	
CO2	22.01	0.00	0.00	
CH4	3.89	0.00	0.00	
Ar	0.00	0.00	0.93	
Vapor Flowrate, Kg/s	5.3480	0.0000	22.6300	0.0000
Solids Kg/s	0.0000	5.1796	0.0000	5.9500
Total Flowrate, Kg/s	5.3480	5.1796	22.6300	5.9500
Temp, DEG C	59.23	400.00	15.00	149.00
Press, Bar	30.48	23.00	1.01	1.01

Stream No.	9	10	11	12
H2		30.60	22.90	99.70
H2O		25.04	38.49	0.30
N2		0.29	0.25	0.00
O2		0.00	0.00	0.00
CO		24.62	9.19	0.00
CO2		16.53	21.54	0.00
CH4		2.92	7.64	0.00
Ar		0.00	0.00	0.00
Vapor Flowrate, Kg/s	21.8596	60.2753	72.3727	0.5192
Temp, DEG C	147.00	400.00	681.96	127.77
Press, Bar	1.01	23.55	18.82	28.70

Stream No.	13	14	15	16
H2	99.70	99.70	0.00	0.00
H2O	0.30	0.30	0.99	0.99
N2	0.00	0.00	77.34	77.34
O2	0.00	0.00	20.74	20.74
Ar	0.00	0.00	0.93	0.93
Vapor Flowrate, Kg/s	0.2014	0.3178	304.6082	304.6082
Temp, DEG C	127.77	127.77	15.00	417.58
Press, Bar	28.70	28.70	1.01	18.82

Stream No.	17	18	19	20
H2	0.00	0.00	4.26	0.00
H2O	0.99	0.99	62.15	1.09
N2	77.34	77.34	0.22	84.82
O2	20.74	20.74	0.00	13.08
CO	0.00	0.00	3.37	0.00
CO2	0.00	0.00	29.86	0.00
CH4	0.00	0.00	0.14	0.00
Ar	0.93	0.93	0.00	1.02
Vapor Flowrate, Kg/s	0.6587	303.9568	102.0876	274.2420
Temp, DEG C	417.58	417.58	979.30	686.33
Press, Bar	18.82	18.82	17.31	17.31

Stream No.	21	22	23	24
H2	0.00	0.00	67.67	1.18
H2O	1.09	1.09	32.33	62.99
N2	84.82	84.82	0.00	0.23
O2	13.08	13.08	0.00	0.00
CO	0.00	0.00	0.00	0.29
CO2	0.00	0.00	0.00	35.16
CH4	0.00	0.00	0.00	0.14
Ar	1.02	1.02	0.00	0.00
Vapor Flowrate, Kg/s	106.4059	167.8361	2.6647	101.5818
Temp, DEG C	686.33	686.33	359.54	362.50
Press, Bar	17.31	17.31	1.30	16.21

Stream No.	25	26	27	28
H2O	0.26	0.00	0.00	0.00
N2	0.64	0.64	0.00	0.00
O2	0.09	0.09	100.00	100.00
CO2	99.01	99.27	0.00	0.00
Vapor Flowrate, Kg/s	59.2497	59.1860	17.0880	17.0880
Temp, DEG C	27.00	43.59	800.48	149.00
Press, Bar	14.66	152.00	0.29	31.17

Stream No.	29	30	31	32
H2O	72.83	0.00	2.99	2.21
N2	0.00	0.00	92.44	89.33
O2	27.17	100.00	3.45	7.39
Ar	0.00	0.00	1.11	1.07
Vapor Flowrate, Kg/s	39.5214	1.2674	150.9495	257.3553
Temp, DEG C	223.95	149.00	800.48	753.98
Press, Bar	30.55	31.17	15.27	15.27

Stream No.	33	34
H2O	2.21	2.21
N2	89.33	89.33
O2	7.39	7.39
Ar	1.07	1.07
Vapor Flowrate, Kg/s	257.3553	257.3553
Temp, DEG C	270.43	125.00
Press, Bar	1.05	1.01

Table 1 - 10: Performance Summary - Coal Based Zero Emission Plant with Vision 21 Technology

Coal Feed Rate (as Received), MT / D	2241
MWt (HHV)	703.6
Fuel Cell Power, MW	260.7
Gas Turbine Power, MW	11.5
Steam Turbine Power, MW	107.1
Methanated Syngas Turbo-Expander Power, MW	4.9
Total Gross Power Generated, MW	384.2
Internal Power Consumption, MW	35.3
Net Electric Power (at Generator Terminals), MW	348.9
Overall Thermal Efficiency (with CO_2 Leaving at 13,893 kPa), % HHV	49.6

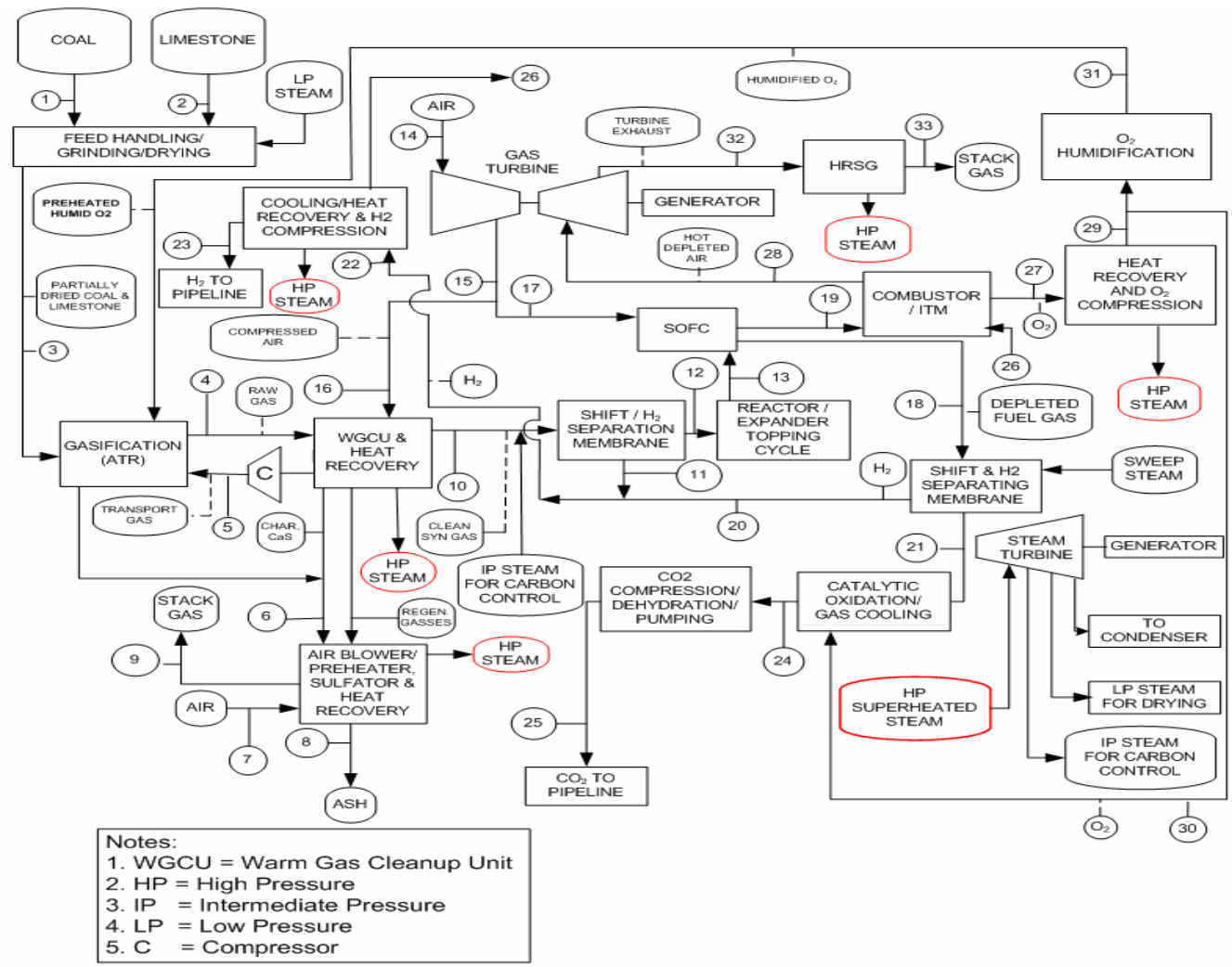

Figure 1 - 7: Block Flow Sketch - Coal Based H_2 Coproduction with CO_2 Capture

Table 1 - 11: Major Stream Data - Coal Based H_2 Coproduction with CO_2 Capture

UTILITY AND PROCESS CONDENSATE STREAMS NOT INCLUDED IN TABLE

METRIC UNITS - COMPOSITION IN MOLE %

Stream No.	1	2	3	4 (See Note 1 below)
H2	0.00	0.00	0.00	29.81
H2O	0.00	0.00	0.00	24.40
HCl	0.00	0.00	0.00	0.006
N2	0.00	0.00	0.00	0.35
NH3	0.00	0.00	0.00	0.17
CO	0.00	0.00	0.00	24.44
CO2	0.00	0.00	0.00	16.64
H2S	0.00	0.00	0.00	0.0855
COS	0.00	0.00	0.00	0.003
CH4	0.00	0.00	0.00	3.59
Vapor Flowrate, Kg/s	0.0000	0.0000	0.0000	67.0891
Solids Kg/s	25.9354	3.8436	28.1000	0.0000
Total Flowrate, Kg/s	25.9354	3.8436	28.1000	67.0891
Temp, DEG C	15.00	15.00	15.00	1052.00
Press, Bar				29.48

Note 1: The concentrations of the sulfur species and HCl are based on the assumption that 85% of the sulfur and 90% of the chlorine entering with the coal will be absorbed by the calcined limestone within the gasifier. Raw syngas may contain trace amounts of HCN and SiO_2. Metal carbonyls have not been reported for this type of gasifier.

Stream No.	5	6	7	8
H2	39.81	0.00	0.00	
H2O	0.15	0.00	0.99	
N2	0.39	0.00	77.34	
O2	0.00	0.00	20.74	
CO	32.64	0.00	0.00	
CO2	22.22	0.00	0.00	
CH4	4.79	0.00	0.00	
Ar	0.00	0.00	0.93	
Vapor Flowrate, Kg/s	5.3072	0.0000	22.6300	0.0000
Solids Kg/s	0.0000	5.1796	0.0000	5.9500
Total Flowrate, Kg/s	5.3072	5.1796	22.6300	5.9500
Temp, DEG C	59.51	400.00	15.00	149.00
Press, Bar	32.75	25.05	1.01	1.01

Stream No.	9	10	11	12
H2		30.06	100.00	9.13
H2O		24.60	0.00	36.21
N2		0.29	0.00	0.35
O2		0.00	0.00	0.00
CO		24.65	0.00	8.88
CO2		16.78	0.00	41.06
CH4		3.62	0.00	4.36
Ar		0.00	0.00	0.00
Vapor Flowrate, Kg/s	21.8596	59.3964	2.3821	69.1723
Temp, DEG C	147.00	333.00	406.00	499.78
Press, Bar	1.01	25.30	1.30	23.57

Stream No.	13	14	15	16
H2	8.20	0.00	0.00	0.00
H2O	35.51	0.99	0.99	0.99
N2	0.36	77.34	77.34	77.34
O2	0.00	20.74	20.74	20.74
CO	4.38	0.00	0.00	0.00
CO2	45.56	0.00	0.00	0.00
CH4	5.98	0.00	0.00	0.00
Ar	0.00	0.93	0.93	0.93
Vapor Flowrate, Kg/s (lb/s)	69.1723	172.6433	172.6433	0.6553
Temp, DEG C (F)	575.72	15.00	417.58	417.58
Press, Bar (PSIA)	18.82	1.01	18.82	18.82

Stream No.	17	18	19	20
H2	0.00	1.86	0.00	46.37
H2O	0.99	47.86	1.06	53.63
N2	77.34	0.32	82.48	0.00
O2	20.74	0.00	15.47	0.00
CO	0.00	3.02	0.00	0.00
CO2	0.00	46.95	0.00	0.00
CH4	0.00	0.01	0.00	0.00
Ar	0.93	0.00	0.99	0.00
Vapor Flowrate, Kg/s	171.9880	81.0551	160.1121	2.3679
Temp, DEG C	417.58	977.43	395.79	352.52
Press, Bar	18.82	17.31	17.31	1.30

Stream No.	21	22	23	24
H2	0.71	91.47	99.87	0.00
H2O	46.99	8.53	0.13	0.25
N2	0.34	0.00	0.00	0.64
O2	0.00	0.00	0.00	0.28
CO	0.32	0.00	0.00	0.00
CO2	51.64	0.00	0.00	98.83
CH4	0.01	0.00	0.00	0.00
Vapor Flowrate, Kg/s	80.8462	4.7500	1.9629	59.3294
Temp, DEG C	356.25	396.81	27.00	27.00
Press, Bar	16.21	1.30	28.13	14.66

Stream No.	25	26	27	28
H2	0.00	99.70	0.00	0.00
H2O	0.00	0.30	0.00	7.32
N2	0.64	0.00	0.00	88.14
O2	0.28	0.00	100.00	3.48
CO2	99.08	0.00	0.00	0.00
Ar	0.00	0.00	0.00	1.06
Total Flowrate, Kg/s	59.2682	0.6682	16.6955	144.0848
Temp, DEG C	43.56	127.77	802.61	802.61
Press, Bar	152.00	28.70	0.30	15.27

Stream No.	29	30	31	32
H2O	0.00	0.00	72.83	7.32
N2	0.00	0.00	0.00	88.14
O2	100.00	100.00	27.17	3.48
Ar	0.00	0.00	0.00	1.06
Total Flowrate, Kg/s	16.6955	0.5595	39.5214	144.0848
Temp, DEG C	149.00	149.00	223.95	302.32
Press, Bar	32.75	32.75	30.55	1.05

Stream No.	33
H2O	7.32
N2	88.14
O2	3.48
Ar	1.06
Total Flowrate, Kg/s	144.0848
Temp, DEG C	125.00
Press, Bar	1.01

Table 1 - 12: Performance Summary - Coal Based H_2 Coproduction with CO_2 Capture

Coal Feed Rate (as Received), MT / D	2241	
MWt (HHV)	703.6	
H_2 Exported	**High**	**Low**
Fuel Cell Power, MW	103.9	184.6
Gas Turbine Power, MW	11.5	10.5
Steam Turbine Power, MW	81.9	91.9
Methanated Syngas Turbo-Expander Power, MW	3.0	3.9
Total Gross Power Generated, MW	200.3	290.9
Internal Power Consumption	45.4	41.1
Net Electric Power (at Generator Terminals), MW	154.9	249.8
H_2 Exported, MWt (HHV)	275	136
% of Coal HHV	39.1	19.4
1000 Nm^3 / D	1,860	920
Kg / D	167,400	82,900
CO_2 Capture, % of Carbon in Coal + Limestone	95	95
Overall Thermal Efficacy, % HHV	61.10	54.83

NONTECHNICAL ISSUES

The recent tumultuous power market has created tremendous financial losses that are creating elevated investment criteria for the long term. This is an unprecedented period of disastrous short-term events impacting new capacity expansion and technology innovation in the long term. The energy market flows in four basic cycles that have traditionally been fairly predictable, but the past five years has created disruptive waves within these cycles that will take 5-10 years to wring out. Ironically, the majority of these negative conditions will be favorable for the Vision 21 design that will offer the characteristics of fuel diversity, low emissions and high efficiencies at a post-2010 timeframe when these characteristics will be more greatly valued by the market place. The overshadowing technology risk is one characteristic that will dominate the Vision 21 design in the post-2010 timeframe. The recent cycles are described in Table 1-13.

The financial markets, credit rating agencies and natural gas supply issues this past quarter continue to dominate the criteria for the financing of new power plants and the commercialization of new technology. This quarter noted the difficulty of financially stressed energy merchants to meet near-term refinancing requirements while in the midst of ongoing regulatory investigations and a cyclical downturn in wholesale power prices. During the quarter, Mirant joined others in filing for Chapter 11 Bankruptcy protection. The fallout from Mirant's decline will be felt most acutely on the next generation of power plants. The banks and bondholders that financed Mirant and others will be around during the next construction phase. But they will scrutinize such capital projects more intensely than they did in the 1990s. Mirant's debacle will make it harder to raise capital because the credit standards will be a lot tougher. The silver lining to the recent trend of utility and IPP developers' financial woes is the elevated attention of the credit rating agencies to environmental issues. The ability to finance the initial and subsequent Vision 21 plants is one of the major non-technical factors that is being considered. To the benefit of the Vision 21 design, the credit rating agencies have intensified their efforts to examine the potential for environmental regulations to disrupt a power generators ability to meet its financial obligations prompted many rating agencies to explore. When establishing ratings, agencies are concerned with a company's ability to continue to generate cash to meet existing obligations. Credit agency ratings presume a long-term view, taking into account events likely to significantly affect a company's ability to continue to generate cash or factors that may place a considerable demand on future cash flows. Environmental obligations fall under the latter. For example, an existing plant may require an upgrade to meet the standards required by current legislation. Alternatively, companies may decide that it is more cost effective to close such a plant rather than make the required investment. The rating agencies are now elevating their assessments of a company's ability to deal with these sorts of contingencies, and the implication on credit quality is factored into the rating.

Most credit rating agencies now factor in the national and regional regulatory environment in which the company is operating against a backdrop of international legislation. In the EU, the regulatory environment is well developed and based on long-term targets. As such, credit rating agencies assume that a company's risk level is lower than if a jurisdiction had less defined or non-existent targets. Notwithstanding, within the EU, differences remain as varying levels of legislation are enacted. Some member states have achieved over compliance, while others have fallen short of the minimum requirements. It is still our position that the Vision 21 design has a potentially a larger attractiveness to the international market than it does the domestic market during the early commercialization phase.

A rating agency's analysis now includes a comparison of a generator's environmental profile to that of its peers. They evaluate a company's annual environmental plan and its approach to overcoming compliance obstacles. The Justice Department recently won it first case against FirstEnergy which was required to install the best available pollution control technology when work was done between 1984 and 1998 on the W.H. Sammis plant near Steubenville in eastern Ohio. The available information enables a credit rating agency to establish whether a company's performance deviates from what is considered to be best practice and to determine whether a company's decisions may affect its competitive position and credit quality.

The overcapacity of "net new generation" was studied during the quarter, and it now appears that the 30-35% reserve margin in the US will not be absorbed until the year 2010 when reserve margins are expected to reach 15-20% (see Table 1-14).

Until the market for wholesale electricity rebounds in the 2005-2006 timeframe, the existing assets will underperform. The recent forecast is that wholesale prices will not return to the $30-$40/MWH range until 2011. It is not until they operate at or near capacity will their values subsequently increase.

Thus, it is favorable that there will be a hiatus for new power plant construction in the US prior to the timing when a Vision 21 plant would be available. This bust cycle of power plant construction has previously served as the incubation period of new generation technology. The volatility of natural gas prices and undercapacity of natural gas pipelines has also been studied this quarter. The short term natural gas shortage has raised the concern of Alan Greenspan to deliver an extremely rare, single topic Congressional testimony on the economic ramifications of continued high prices for natural gas. Chairman Greenspan's testimony concluded that,

> … the long-term equilibrium price for natural gas in the United States has risen persistently during the past six years from approximately $2 per million Btu to more than $4.50. The perceived tightening of long-term demand-supply balances is beginning to price some industrial demand out of the market. It is not clear whether these losses are temporary, pending a fall in price, or permanent.
>
> … If North American natural gas markets are to function with the flexibility exhibited by oil, unlimited access to the vast world reserves of gas is required. Markets need to be able to effectively adjust to unexpected shortfalls in domestic supply. Access to world natural gas supplies will require a major expansion of LNG terminal import capacity. Without the flexibility such facilities will impart, imbalances in supply and demand must inevitably engender price volatility.

As the technology of LNG liquefaction and shipping has improved, and as safety considerations have lessened, a major expansion of U.S. import capability appears to be under way. These movements bode well for widespread natural gas availability in North America in the years ahead.

Others would argue that the long lead times for constructing LNF facilities due to siting, environmental and safety concerns would more logically forecast that natural gas suppliers will marginally price natural gas below the potential cost for LNG imports, and thus indefinitely delay LNG as a meaningful long term source of natural gas. Forecasts do not anticipate a return

to a $2.75-$3.50 MMBtu until 2006-2007. Thus, one might anticipate continued natural gas volatility prior to 2006 but with a consistent decline from historical highs to a trading range of $2.75 to $3.50/MMBtu. Since more and more power plants operating at the marginal clearing price in competitive markets will be fueled by natural gas, the price of coal would need to mirror these rates.

The Role of Trading Groups

One can anticipate the day that the trading groups return to manage the generating assets and arbitrage gas and electricity prices. Right now the financial institutions are hiring trading companies to manage the assets that they have reluctantly become owners. Therefore, a plant that appeals to a portfolio manager may have high appeal in the future.

The boom-bust cycle will be closely watched since it was an underlying cause of the collapse of the wholesale prices in the US. Professor Andrew Ford of Washington State University will probably be hailed as the one who pinpointed the boom-bust cycle most accurately. Dr. Ford estimated that demand growth in California averages 2 percent yearly, most of which can be attributed to net population growth (1.9 percent in 2001). California was "under-building" in 1998-2000 at the beginning of deregulation for wholesale markets, followed by massive overbuilding as investors chased after high retail prices for electricity. Dr. Ford reported that investors find advantages not to build when reserves exceed 15 percent. They will wait to see prices rise dramatically before starting new construction. Unfortunately, the elapsed time for financing and development increases the risk of outages for end users. Calpine's strategy of moving quickly into the market with proven technology demonstrated that competitive forces can undermine longer term, innovative technology that have a lengthy project development cycle.

Table 1 - 13: Current Status of US Power Cycles

1. Fuel price cycle	High forward gas prices and volatility; increasing compliance costs for coal.
2. Technology Cycle	No leap forward in turbine design or gas finding. Look for new clean coal or nuclear technologies.
3. Credit and capital cycle	Investment capital for new capacity additions is constrained.
4. Capacity building cycle	Overbuilt in all regions save isolated load pockets; declining net additions

Table 1 - 14: Net New Generating Assets in the U.S. (GW)

	2000	2001	2002	2003	2004	2005
GW	30	45	72	48	8	2

RESULTS AND DISCUSSION – PHASE 2

TASK 1 - EFFICIENT RECOVERY OF CO_2 IN CURRENT STATE-OF-THE-ART PLANTS

The following discusses the process selected for this state-of-the-art Near Zero Emission / H_2 Coproduction facility. A qualitative technology evaluation is conducted of the various plant subsection options that may be suitable for incorporation in the gasification-based plant. This analysis and the results concluded with respect to gasifier technology selection are specific to the Illinois No. 6 coal feedstock which is a high rank bituminous coal.

Gasifier

Current-state-of-the-art (commercially proven) gasification technologies are listed below:

1) General Electric (GE)
2) ConocoPhillips (E-Gas)
3) Shell
4) British Gas Lurgi (BGL)

The BGL gasifier produces a large amount of CH_4 and would require reforming (prior to shifting) of the syngas in order to convert the CH_4 before the carbon may be captured as CO_2. Thus, this gasification technology is de-selected and the discussion that follows will address the remaining three gasification technologies.

GE Gasifier versus Shell Gasifier

The two gasifier types are depicted in Figures 2-1 and 2-2 and their major attributes are summarized below:

GE Gasifier

- Top-mounted feed injector
- Solid feeds fed as water slurry
- Syngas with high H_2/CO ratio
- Total Quench (TQ) design
  - Lower capital cost
  - Suitable for sour shift (H_2 production/CO_2 Capture)
- Syngas cooler available for higher efficiency
- Commercially proven up to ~ 80 bar operating pressure on oil feed

Shell Gasifier

- Horizontally opposed injectors near bottom for solid feeds
- Dry solid feeds
  - Potential for higher cold gas efficiency
  - Lower O_2 consumption
  - Dry solids conveyed by N_2
  - Convective waste heat boilers
- Membrane wall gasifier for solid feeds
- Reduction of waste heat boiler inlet temperature by gas recycle
- Candle filters remove dry solids from syngas
- Pressure limited to ~ 40 bar

With the GE gasifier, three options are available for heat recovery from the raw syngas leaving the gasifier and before it is scrubbed with water: (1) a radiant cooler followed by a convective cooler, (2) only the radiant cooler, and (3) quenching the gas with water by direct contact while eliminating the costly syngas coolers as depicted in Figure 2-1. For applications involving a high degree of shifting of the syngas to convert most of the CO into CO_2 for capture, the following steps are utilized: (1) shift the raw gas leaving the particulate scrubber utilizing a sour shift catalyst after preheating to the required temperature and (2) remove the CO_2 in the acid gas removal unit after recovering the heat from the raw gas. This sour shift configuration integrates especially well with the GE gasifier incorporating the direct contact cooling of the gasifier effluent ("total quench" design). Steam injection into the raw gas upstream of the shift unit is not required, since the moisture present in the scrubber outlet gas is sufficient. It also simplifies the design of a physical solvent-based acid gas removal unit (required to remove the sulfur compounds and the CO_2) as explained later.

On the other extreme, with the Shell gasifier which is offered with syngas coolers as depicted in Figure 2-2 which tends to maximize the heat recovery, sweet shift after sulfur removal has been proposed in the past. However, more recently, Shell has stated that they could limit the amount of heat recovered from the raw gasifier effluent in order to increase the moisture of the scrubbed gas somewhat, making it more amenable to sour shifting.

The Shell gasifier with its dry feed system has a lower O_2 demand, typically about 5 to 6% lower than the GE gasifier. The lower O_2 demand does reduce the cost of the air separation unit but the cost savings are typically largely off-set by the higher cost of the gasifier and its high temperature syngas coolers as compared to the GE gasifier system. Also, the dry feed system with its drier and other special equipment, has greater power consumption, higher costs and limits the possible operating pressure of the gasifier as compared to a gasification system using a slurry feed.

The lower O_2 demand along with having a dry feed entering the gasifier results in increasing the cold gas efficiency (defined as the ratio of the HHV of the net syngas produced by the gasifier to the HHV of the feedstock) of the Shell gasifier over the GE

gasifier by more than 5% depending on the relative carbon conversion between the two types of gasifiers. However, the overall thermal efficiency based on H_2 [defined as the ratio of the HHV of the product decarbonized fuel gas (H_2) to the HHV of the feedstock which is also indicative of the relative coal consumption rate per unit of decarbonized fuel gas (H_2) produced] of the GE and Shell gasifiers are similar in such applications when similar carbon conversions can be maintained, despite the fact that the Shell gasifier has a higher cold gas efficiency. Shell's gasifier effluent has a significantly higher CO to H_2 ratio. The syngas thus requires a much higher degree of shifting, in which a significant amount of the chemically bound energy in the syngas is degraded to thermal energy. Also, a large addition of steam upstream of the shift reactors is required not only as a reactant but also as a thermal diluent to control the temperature rise across the reactor. Thus, much of the advantages of the Shell gasifier in having a higher cold gas efficiency and higher amount of high pressure steam production are lost; a significant portion of the steam being utilized for addition to the syngas upstream of the shift units. The high operating pressure of the GE gasifier is taken advantage of in the acid gas removal unit by utilizing a physical solvent process which can selectively separate the H_2S from the CO_2, thus producing an acid gas that is acceptable for the Claus sulfur recovery unit. The net result is that the overall plant efficiencies of the GE and Shell gasifier based plants are essentially equalized while the Shell based plant carries the burden of the expensive gasifiers and syngas coolers. The cost differential between the two types of plants becomes more significant when spare gasifiers have to be included in order to achieve high availability for the syngas. Results of a study published by the International Energy Agency comparing the GE gasifier with the Shell gasifier indicate that the cost of electricity generated by an IGCC consisting of firing a fuel gas that is mostly H_2 in the gas turbines (while minimizing the CO_2 emissions) is 12.5% higher for the Shell gasifier based plant.

GE Gasifier versus E-Gas Gasifier

The E-Gas gasifier is depicted in Figure 2-3 and its main features are summarized below:

- Horizontally opposed bottom injectors with upward flow of syngas
- Feed injected in top section (2nd stage) also but without O_2
  - Evaporation of slurry water and endothermic reactions help cool syngas to limit temp in syngas cooler
  - Increases cold gas efficiency
- Reduction of syngas cooler inlet temperature by gas recycle
- Candle filters for recovery of entrained ash and unconverted carbon for recycle
- Commercially proven at ~ 30 bar operating pressure.

The E-Gas gasifier with its two stages also has a lower O_2 demand, typically about 5% lower than the GE gasifier. The lower O_2 demand does reduce the cost of the air separation unit but the cost savings are typically largely off-set by the higher cost of the gasifier and its high temperature syngas coolers as compared to the GE gasifier system. The lower O_2 demand results in increasing the cold gas efficiency of the E-Gas gasifier over the GE gasifier. However, the E-Gas gasifier has some of the same disadvantages as the Shell gasifier in decarbonized fuel gas (H_2) generation applications, however, such

as the requirement for a large amount of steam addition to the syngas prior to shifting and the lower syngas pressure. Furthermore, a significant fraction of the carbon in the syngas is tied up as CH_4 which requires a greater degree of shifting and / or CO2 removal in the acid gas removal (AGR) unit to achieve a given overall carbon capture.

Thus, the high pressure GE total quench type gasifier is utilized for this state-of-the-art Near Zero Emission / H_2 Coproduction plant fed with Illinois No. 6 coal (a high rank bituminous coal).

Power Block and Heat Recovery

Solid Oxide Fuel Cell

The fraction of the total power produced by the SOFC in an SOFC based Near Zero Emission / H_2 Coproduction plant is approximately 70%. Thus, for a central station power plant producing 450 to 500 MW gross, the SOFC would have to generate as much as 300 to 350 MW. This represents a scale up of orders of magnitude over the currently demonstrated units, which have been limited to less than a MW size. In addition to scale up, another challenge consists of developing materials that allow much higher current densities, which again are orders of magnitude higher than the current values, in order to reduce the physical size to something more manageable from a plot space and piping standpoint. For a 300 to 350 MW SOFC, the estimated required cross-sectional area for oxygen ion transport or flow of current within the cells is greater than 100,000 m^2 (approximately one million ft^2).

Gas Turbines

HAT Cycle. The HAT cycle based on results of previous evaluation by Fluor, EPRI and others shows 8% reduction in heat rate and a significant reduction in capital cost over a comparable combined cycle. In the HAT cycle, a significant portion of the excess air, which is typically the required thermal diluent and working fluid in the gas turbine, is replaced with water vapor. The water vapor is introduced into the system in an efficient manner, by pumping of a liquid followed by low temperature evaporation. Pumping a liquid requires less mechanical energy compared to gas (air) compression. Evaporation of the water into the compressed air stream is accomplished using low temperature heat, in a counter-current multistage humidification column, rather than generating steam in a boiler.

This method of humidification has many advantages. It permits the use of low temperature heat for evaporating the water. For example, water which boils at 100 C (212 F) at atmospheric pressure may be made to evaporate at room temperatures when exposed to a stream of relatively dry air. The humidification process also reduces the parasitic load of compressing the combustion air by intercooling the compressor, while recovering most of the heat removed in the intercooler for the humidification operation. Thus, a more thermally efficient power cycle is achieved. Humidification of the

compressed air also leads to a reduction of NOx emissions. The humid air is preheated in the turbine exhaust in a recuperator to recycle the exhaust energy to the combustor, thus eliminating the expensive steam bottoming cycle as in a combined cycle.

Proof of concept has been successfully demonstrated with a Volvo and ABB built 600 kW unit. The development of this unit was funded by Volvo, ABB, the Swedish government and a number of Scandinavian utilities. The unit demonstrated single digit NOx levels, while the CO was low enough that no post combustion control was required. Recovery of water from the stack gas for recycle was also tested to make the plant self-sufficient. In the U.S., a test program funded by the U.S. DOE for development of the combustor for HAT has been successfully completed by Turbo Power and Marine with test results again confirming the single digit NOx values without requiring any post combustion CO control. One of the major findings of this work was that the HAT could be operated at much higher firing temperatures than conventional gas turbines without being constrained by the NOx giving it an additional efficiency advantage over its intrinsic thermodynamic efficiency.

Despite the HAT cycle's potential advantages, the development of the required turbo-machinery is occurring at a very slow pace, mainly due to the very high development costs for developing the required large intercooled gas turbine. Studies sponsored by EPRI have found that the costs of developing the engine could be as high as $700 to 800 million. For the time frame of these projects, it is highly improbable that the HAT cycle in the required size range will be available.

Steam Cooled Gas Turbine. In a conventional air-cooled gas turbine, more than 25% of the compressor air is used for turbine cooling, which results in a large parasitic load. As the firing temperature is increased in order to increase the efficiency of the cycle, the demand for cooling air increases. Closed circuit steam cooling of the gas turbine provides an efficient way of increasing the firing temperature without having to use a large amount of cooling air. (Note that steam with its very large heat capacity and thermal conductivity is an excellent coolant.) Closed circuit cooling also minimizes momentum and dilution losses in the turbine while the turbine operates as a partial reheater for the steam cycle.

The General Electric (GE) H series gas turbines incorporate steam cooling. GE has announced that the first 50-cycle machine has been successfully started up at a U.K. site. Siemens Westinghouse and Mitsubishi both offer the G series gas turbines that incorporate some steam cooling. None of these vendors, however, are willing to provide any performance data for these steam cooled machines in syngas applications at this time. They have stated that they will be able to provide such data only after the machine(s) have logged significant operating hours on natural gas. Thus, the steam-cooled gas turbine is not considered for the study, and instead the GE Frame 7FB gas turbine is utilized. It should be noted, however that since this gas turbine is designed primarily for natural gas operation with control of NOx emissions using a premixed dry low NOx combustor, a derating of the firing temperature is expected in order to maintain the blade metal temperatures within their design limits, the blade cooling air passages and consequently the amount of cooling air limiting the degree of cooling that may be

achieved. The higher blade metal temperatures are caused by the higher heat transfer rates from the working fluid to the blades (due to the higher moisture content of the working fluid) for a given coolant amount. Thus, the derating of the firing temperature is caused by the use of an engine operating under conditions that are significantly different from what it is designed/optimized for. Note that in the case of HAT, it was stated that higher firing temperatures are possible to incorporate in its design without letting the NOx emissions constrain it; the HAT engine would be designed for a working fluid with a higher moisture loading since such a case would be its normal mode of operation. A derating in the firing temperature of a HAT engine designed/optimized for a different set of operating conditions would also be expected when operating on a high H_2 content syngas, although the magnitude of derate may be different. A lower amount of derating is expected for HAT since the relative increase in the water vapor content of the working fluid when combusting a fuel gas rich in H_2 is lower in the case of HAT since in the case of HAT a large amount of water vapor is already present in the working fluid (introduced into the combustion air by the air humidifier).

Air Separation Unit

The largest consumer of parasitic power in an IGCC is the air separation unit (ASU). ASU power consumption constitutes more than half of the total power consumed by the plant or 10 to 20 percent of the total power produced by the plant. Thus, technologies are being developed as well as various studies have been performed with the intent to minimize the parasitic power consumption of the plant. The following summarizes the findings.

<u>ITM or OTM.</u> Praxair as well as Air Products are developing membranes (semi-conductor materials) that operate at temperatures in the neighborhood of 800 C to 900 C (1500 F to 1600 F) for air separation. This technology promises reduction in both power consumption and capital cost by about 30 percent. Praxair, however, points out that for this technology to be economical, it will require the integration of the membrane unit with a gas turbine capable of roughly 50% of the total gas turbine inlet air (i.e., air entering the gas turbine compressor) being available for extraction. The integrated system consists of providing hot pressurized air extracted from the gas turbine compressor to the membrane unit which separates a portion of the O_2 by transferring the O_2 as ions through the membrane wall while the depleted air is returned to the gas turbine. Thus the gas turbine must also be capable of receiving the depleted air from the membrane unit which is typically at 800 C to 900 C (around 1500 F to 1600 F), the operating temperature of the membrane unit. Note that the air supplied to the membrane unit is preheated to the operating temperature of the membrane unit by directly firing fuel gas into the air stream. The depleted air exiting the membrane unit consists of a stream that has an O_2 content that is lower than that of fresh air; a portion of the O_2 being separated from the air stream by the membrane.

Large gas turbines (utility scale) with these required capabilities for integration with the membrane unit are not commercially available and hence a cryogenic air separation unit is utilized in this state-of-the-art Near Zero Emission / H_2 Coproduction plant.

Cryogenic Air Separation. The optimum O_2 purity for IGCC applications with low pressure (LP) or high pressure (HP) cryogenic ASUs is 95% based on internal studies made by both Praxair and Air Products for the Demkolec IGCC plant. The number of distillation stages decreases steeply as the purity is reduced from 99.5% to 95%, but remains quite insensitive as the purity is further reduced. The O_2 compression costs (both capital and operating) continue to increase as purity is decreased below 95%. Note that the size of equipment downstream of the ASU also increases (slightly) while the efficiency of the gasification unit decreases as the purity is reduced.

A paper published by Linde (C. R. Baker, Hydrocarbon Processing, July 1981) supports the above stated relationship between the number of stages and the O_2 purity although the results are for an LP ASU. The separation energy according to the Linde paper also tends to flatten off at purity levels below 95%.

For IGCC applications, HP ASUs are preferred over LP ASUs since the oxygen and nitrogen product can be used at elevated pressures, and air extraction from the gas turbine for the ASU is possible. The feed air pressure for an LP ASU is in the range of 350 to 600 kPag (50 to 90 psig). The feed air pressure for an HP ASU is set based on the pressure set by the air extracted from the gas turbine. The operating pressure of the ASU distillation operation affects the bubble point of the liquid being distilled in the cold box. The higher the pressure, the less severe the cold box temperature is, which results in a reduced pressure ratio of the incoming air to that of the outgoing streams (O_2 and N_2). If the O_2 and the N_2 leaving the cold box can be utilized within the gasification plant at the product supply pressure or higher, then a net increase in the overall IGCC plant efficiency is realized. The HP N_2 produced by the cold box is further compressed and fed to the gas turbine for increased power output and NOx reduction.

Results from previous studies have indicated that about 2% reduction in both the plant heat rate and plant cost may be realized by installing the HP ASU over the LP ASU. Both the Demkolec IGCC and the Polk County IGCC utilize an HP ASU (with 95% purity O_2).

For a liquid slurry fed total quench type gasifier such as GE total quench gasifier, a large amount of low temperature waste heat is generated and a large amount of by-product N_2 is generated since the specific O_2 consumption (tons of O_2 per ton of coal) is relatively high. Since the low temperature waste heat can be recovered for fuel gas humidification to provide both motive fluid and thermal diluent in the gas turbine, it competes with the ASU by-product, N_2. The humidification operation consists of counter-currently contacting the fuel gas with hot water in a packed column to simultaneously transfer heat and mass (water vapor) into the fuel gas stream from the water stream. Note that the evaporation of the water in the presence of the fuel gas within the column occurs at a temperature much lower than the boiling point of water. Thus, bulk of the heat required for this evaporation process may be provided by circulating the water leaving the column through the low temperature waste heat recovery exchanger. The water vapor added to the fuel gas serves the dual purpose of providing additional pressurized motive fluid for expansion in the gas turbine as well as the thermal diluent for NOx control. The added

water vapor reduces the heating value of the gas, and since GE has set a lower limit on the heating value, a limited amount of N_2 (provided by the ASU as a by-product) may be utilized for injection into the gas turbine.

In such plants, an ASU design that produces a limited amount of HP N_2 is desirable in order to match the demand for HP N_2 while maximizing low temperature heat for the syngas humidification operation.

Slurry Options

The quality and quantity of the slurry transport medium are principal determinants of thermal efficiency in the gasification process since they significantly impact the oxygen requirement. One advantage of a slurry feed system is that it can operate at higher pressures than a dry feed system can. A slurry fed gasifier can operate at much higher pressures than a dry solids fed gasifier, as high as possibly 8300 kPag (1200 psig) for a slurry fed system, whereas a dry feed system is limited to about 4100 kPag (600 psig). Since CO_2 removal is required in this study, the high pressure can be used to help reduce the cost (capital and operating) of the acid gas removal unit and the CO_2 product compression system, which can partially offset the additional oxygen cost of a water slurry fed system. On the other hand, slurry feed systems generally have a lower gasifier cold gas efficiency and higher oxygen consumption than dry feed systems, because oxygen must be used to heat up and evaporate the slurry water. Therefore, it is advantageous to minimize the slurry water and / or use another coal transport medium that reduces the oxygen demand. CO_2 has been studied as an alternate transport medium. CO_2 / coal slurries are pumpable up to about 88 wt % solids (water/coal slurry being limited to less than 70 wt % in the case of bituminous coals and typically less than 60% in the case of sub-bituminous coals), and the latent heat of vaporization for CO_2 is only about 25% that of water. This lowers the oxygen consumption significantly and makes CO_2 a good candidate for a transport medium.

The main drawbacks to using CO_2 as the transport medium instead of water are the additional costs for compressing and liquefying the CO_2, and the increase of CO in the syngas due to the CO_2 in the gasifier feed which increase the load on the shift unit.

Various “skimming,” cyclone, and dense-phase methods used in slurry fed systems are currently being investigated in the industry, motivated by the energy and capital expense drawbacks associated with the water or CO_2-based slurry systems.

Results presented in an EPRI report (AP-4509) do show that in a lignite-based straight IGCC plant (i.e., without carbon capture), the overall plant heat rate is reduced by as much as 14% with the liquid CO_2-based slurry system. In plants requiring carbon capture where shifting of the syngas is required, the reduction in heat rate is expected to be less significant, however. This is due to the following reason:

- The CO to H_2 ratio in the gasifier effluent is increased when utilizing CO_2 as the slurrying medium

- This results in the requirement for a greater degree of CO shifting,
- which leads to conversion of a greater percentage of the chemical energy contained in the syngas to heat since the shift reaction is exothermic; i.e., a portion of the energy input bypasses the topping gas turbine and enters directly into the bottoming steam cycle.

At the present time, however, significant design issues still exist in taking this novel feed system from conceptual plan to pilot scale operation and thus a water slurry system will be utilized for the state-of-the-art Near Zero Emission / H_2 Coproduction plant.

NOx Emission Control

The name plat NOx emission from a GE Frame 7FB gas turbine on syngas with massive N_2 and/or moisture addition is 15 ppmV (dry, 15% O_2 basis). To achieve lower NOx emissions, a selective catalytic reduction (SCR) unit would be required. The unreacted ammonia leaving the SCR, however, reacts with any SO_3 present to form ammonium salts that can (1) deposit in the low temperature sections of the HRSG causing fouling, and (2) result in particulate emissions. In order to limit the number of HRSG washes to one per year to remove these salt deposits, the total equivalent sulfur concentration in the gas turbine exhaust should be limited to 2 ppmV, which is roughly equivalent to 10 to 15 ppmV total sulfur in the syngas. The SO_3 is formed by (1) oxidation within the gas turbine combustor of the H_2S and COS present in the syngas, and (2) oxidation of the SO_2 within the SCR containing a vanadium catalyst.

If an SCR is required, then the following design option may be an absolute requirement:

- Utilize a low vanadium content SCR catalyst.
- Install a NH_3 oxidation catalyst (developed by Engelhard) downstream of the SCR to oxidize the NH_3 slipping through the SCR catalyst into N_2 and H_2O in order to stay within the NH_3 emission limits. The catalyst can reduce the incoming concentration of NH_3 from 1 - 20 ppmV to less than 0.5 ppmV (the ammonia oxidation catalyst itself produces some SO_3).
- Design the acid gas removal unit in the gasification plant to limit the concentration of the sulfur compounds in the fuel gas to 10 ppmV.

Acid Gas Removal

The proposed scheme for controlling the carbon emissions consists of the following steps: (1) shifting of the raw gas leaving the particulate scrubber utilizing a sour shift catalyst after preheating to the required temperature, (2) heat recovery and gas cleanup to remove trace components, and (3) capture of the CO_2 in the acid gas removal unit used for desulfurization of the syngas.

The following six acid gas removal technologies are considered:

1. Selexol™ (licensed by UOP)
2. CO_2LD Sep^{SM} (A cryogenic process licensed by Fluor)

3. Benfield (licensed by UOP)
4. Amine Scrubbing
5. Rectisol
6. Morphysorb

Among the first five technologies listed above, the Selexol™ process and the Cryogenic CO_2LDSep^{SM} process show significant advantages. The Morphysorb process which utilizes a physical solvent is also a potential candidate especially suitable to IGCC applications where large amounts of sour gas components have to be removed. The solvent has already been used for the sour gas removal from natural gas in a plant located in Kwoen, British Columbia, Canada and has proven to be a safe and reliable process for more than two years. However, treating of syngas in Morphysorb has not been tested yet, the first application to syngas will be tested at the FlexFuel facility in Des Plaines by the Gas Technologies Institute in the upcoming months. The licensor of this process is not willing to provide any performance information at the current time and wants to wait till they obtain data from the field testing.

The amine scrubbing process with additives to improve the selectivity between H_2S and CO_2 absorption does not produce an acid gas suitable for even a Selectox sulfur recovery unit, as a minimum of 5 percent H_2S concentration is required in its feed gas for stable operation. An acid enrichment unit is required and in addition to this enrichment step, another amine unit to remove additional CO_2 that slips through the primary amine unit is required (see Figure 2-4). The equivalent power consumption (net electric power + thermal energy of low pressure steam converted to electric power using an appropriate conversion efficiency) of the amine-based unit is found to be significantly higher than the Selexol-based unit.

With respect to the Benfield process, it is found that it is unable to meet the sulfur specifications in the product gases, and cannot demonstrate and selectivity between H_2S and CO_2, which is critical to this application. The modest incremental back pressure of the Regenerator does not overcome its serious deficiencies for this application.

Since the sulfur specification for the fuel gas is not too stringent, it is not necessary to install a Rectisol unit, the Rectisol unit tends to be relatively expensive, and its use is typically justified only when the treated gas suitable for chemical synthesis is required (< 0.1 ppmV sulfur).

Metal Carbonyls

Metal carbonyls that may be present in the raw gas, such as those of nickel and iron, deposit as nickel sulfide at elevated temperatures (such as those in the shift reactors) in the presence of a catalyst in the top layers of the first-stage shift reactor catalyst bed. It has been found that the top 0.5 meters (1 to 2 ft) of the shift catalyst needs to be replaced approximately every two years due to increased pressure drop caused by the sulfide deposition. The impact on the annual operating cost of replacing the top section of the

bed at a greater frequency (2 years instead of the normal 3 years) is not expected to have a very significant effect on the overall economics of the plant.

Mercury, Arsenic, Cadmium and Selenium

These metals typically volatilize within the gasifier and leave the gasifier along with the raw syngas. Sulfided activated carbon has been used to remove mercury and arsenic from coal derived syngas at the Tennessee Eastman gasification plant. Calgon offers this type of activated carbon for removal of mercury, reducing its concentration to as low as 0.01 to 0.1 $\mu g/Nm^3$ Hg in the syngas depending on the operating temperature and moisture content. Hg is captured predominantly as a sulfide, but some of it is captured in its elemental form. The spent carbon has to be disposed of as a hazardous waste although attempts are being made to recover elemental Hg. It might be saleable if a market does exist for it, else the recovered Hg itself will become a disposal problem. Hg capture by sulfided carbon beds is unaffected by pressure of the syngas. The capture efficiency is reduced, however, as the operating temperature is increased and as the relative humidity of the syngas is increased.

Experience at the Tennessee Eastman plant indicates that activated carbon is even more effective in capturing the arsenic. Calgon's experience has shown that arsenic if present in the form of an arsine, is captured by this sulfided carbon. SudChemie offers the activated carbons for removal of arsenic and its compounds. A copper impregnated carbon is offered to capture arsenic if present as an organic compound.

Other volatile metal compounds that may be present in coal derived syngas are those of cadmium and selenium. Capture of these species by the activated carbon is yet to be ascertained. Any metal (Ni and Fe) carbonyls that may remain in the syngas after passing through the shift reactors may be expected to be captured by the sulfided activated carbon bed.

COAL BASED NEAR ZERO EMISSION / H_2 COPRODUCTION PLANT WITH SELEXOL™

The following provides a process description for this FutureGen type plant configured around the Selexol™ processes.

Process Description and Flow Diagrams

An overall block flow diagram of this FutureGen type plant is given in Figure 2-5 while the major process stream data are summarized in Table 2-1. The plant consists of the following major process units:

- Air Separation Unit
- Gasification Unit
- CO Shift and Low Temperature Gas Cooling (LTGC) Unit
- Acid Gas Removal Unit (Selexol) Unit

- Claus Sulfur Recovery and Tail Gas Treating / Recycle Unit
- H_2 Coproduction [Pressure Swing Adsorption (PSA)] Unit
- Fuel Gas Humidification Unit
- Power Block
- Carbon Dioxide Compression and Dehydration Unit.

Air Separation Unit

The primary purpose of the Air Separation Unit (ASU) is to supply high pressure, high purity oxygen (at a nominal 95 mole %) to the Gasification unit. The Sulfur Recovery unit also consumes a small quantity of oxygen. Oxygen and nitrogen in air are separated by means of cryogenic distillation. Approximately half of the nitrogen separated from the air leaves the distillation unit at pressure and is compressed and injected into the gas turbines for NOx emissions control as well as providing additional motive fluid.
To assure a high degree of availability, the ASU consists of two 50% parallel trains, each capable of operating at a turndown ratio of 70% without having to vent air or oxygen. The two trains are considered a packaged turnkey unit supplied by a vendor.

Ambient air is sent through a filter to remove dust and other particulate matter and then compressed. Interstage cooling and after-cooling of the compression is accomplished with cooling water. The compressed air is filtered in the air pretreatment system to remove moisture, carbon dioxide and any hydrocarbons present. The clean, dry air is liquefied utilizing a combination of chilling, feed/effluent heat exchange, compression and turbo-expansion. The expander may be compressor loaded or generator loaded.
A multi-column system separates the liquefied air into a high purity nitrogen stream and a high purity oxygen stream. The air pretreatment system consists of two molecular sieve vessels. The vessels are operated in a staggered cycle: while one vessel is being used to filter the compressed air, the other is regenerated with the waste nitrogen stream from the distillation columns. The waste nitrogen is heated to the required regeneration temperature with medium pressure (MP) steam.

Storage facilities for oxygen and nitrogen are provided for startup and orderly shutdown of the gasification train(s) when there is an unplanned outage in ASU. The ASU product inventories are:
- two minutes of gaseous oxygen storage,
- eight hours of liquid oxygen storage, and
- nine hours of liquid nitrogen storage.

MP steam is used as the heating medium for all product vaporizers.

Coal Preparation/Gasification Units

The unit consists of the following sub-systems:
- Coal Grinding/Slurry Preparation – 3 x 50% trains
- Quench Gasifier and Slag Handling – 3 x 50% trains

- Syngas Scrubber – 3 x 50% trains
- Vacuum Flash System – 3 x 50% trains
- Soot Filtration – 3 x 50% trains
- Condensate Stripping – 1 x 100% train
- Wastewater Pretreatment (WWPT) – 1 x 100% train
- Miscellaneous Supporting Facilities

The coal grinding is a continuous operation. The coal feed to the grinding mills is weighed and its flow rate is regulated. For the bituminous coal, a fluxant is not required to reduce the melting point of the coal ash. The grinding mills reduce the feed coal to the design particle size distribution. Coal dust recovered by dust collection systems in the coal storage areas may also be sent to the grinding mills. Slurrying water and additives are added to the grinding mill with a feed ratio controller to control the viscosity and produce the desired slurry concentration. Three trains are provided for the coal grinding/slurry preparation, each capable of producing 50% of the total plant slurry feed requirement. Therefore, one train may be shut down for maintenance at any time without impacting the plant power output.

The coal slurry is pumped from a slurry holding tank to the Gasifiers where it reacts with high purity oxygen. In this arrangement, the reaction chamber effluent is cooled by direct contact with water. The heat carried away by the raw syngas from the gasifier is ultimately recovered as MP and LP steams downstream in the gas cooling unit.
A quench gasifier consists of a reaction chamber located above a quench chamber. The gasifier is a refractory-lined vessel capable of withstanding high temperature and pressure. The coal slurry and oxygen are fed via a feed injector mounted on top of the gasifier. The injector is cooled by circulating water in a closed-loop injector cooling water system. The coal and oxygen react in the reaction chamber and under conditions of partial oxidation to produce a syngas, which consists primarily of hydrogen and carbon monoxide with lesser amounts of water vapor, carbon dioxide, hydrogen sulfide, methane, and nitrogen. Traces of carbonyl sulfide and ammonia are also formed. Ash, which was present in the coal, and the unconverted carbon in the gasifier form a liquid melt called slag.

The hot syngas and slag flow downward from the reaction chamber into the quench chamber via a dip tube. The syngas and the slag are cooled by quench water at the bottom of the dip tube. The slag solidifies and is fractured by contact with the water.

The syngas exiting the quench chamber is fed to the syngas scrubber. Syngas exits the top of the syngas scrubber and flows to the CO Shift unit and gas cooling unit.

<u>CO Shift and Low Temperature Gas Cooling Unit</u>

The purpose of this unit is to convert most of the carbon monoxide in the syngas to hydrogen by means of the water gas shift reaction:

$$CO + H_2O \longleftrightarrow H_2 + CO_2$$

This conversion step is crucial to the overall carbon capture of the IGCC plant.

The small amount of carbonyl sulfide (COS) in the raw syngas is also converted into hydrogen sulfide via the following hydrolysis reaction:

$$COS + H_2O \longleftrightarrow H_2S + CO_2$$

Ammonia in the feed passes through the shift reactor unchanged and will not affect the catalyst performance. On the other hand, hydrogen cyanide will be hydrogenated to methane and nitrogen. The raw syngas from the Syngas Scrubber has sufficient water vapor to support the water gas shift reaction. Therefore, additional steam injection at the shift reactor is not required.

Based on the shift catalyst volume requirement as estimated by the vendor, two 50% trains are required for this section. This configuration also enhances the availability of the IGCC plant.

The heat evolved by the highly exothermic shift reaction is used to generate high pressure steam as well as preheat the reactor feed. The remaining sensible heat is further recovered by generated steam at lower pressures and by heating several process streams to cool the shifted syngas down to a level suitable for the Acid Gas Removal unit. Thus the proper design of this section is one of the key factors in determining the overall energy efficiency of the Near Zero Emission / H_2 Coproduction plant.

Scrubbed syngas from gasification is preheated in a feed/effluent exchanger before entering the shift reactor. The reactor inlet temperature is maintained at start-of-run and at end-of-run by manipulating the scrubbed syngas bypass around the feed/effluent exchanger. The temperatures are set to limit the temperature rise of the syngas as it flows through the shift reactor. An electric heater is provided for startup.

The hot shifted syngas exiting the reactor is cooled successively by the first series of exchangers: the HP steam generator, the reactor feed/effluent exchanger, the IP steam generator, the process condensate heater, and the MP steam generator. The water condensed out from the shifted gas is removed and collected in a process condensate return drum.

The shifted gas is used to heat up the circulating water streams from the fuel gas humidifiers. The outlet temperature of the MP steam generator is set to support the humidification processes. Water condensed out of the shifted gas in these cooling steps is also collected in the process condensate return drum.

The shifted gas is further cooled by heating the cold vacuum condensate from the surface condenser of the steam turbine. The shifted gas temperature then flows through a mercury removal bed where 95% of the mercury is captured. Arsenic, Cadmium and Selenium are also expected to be captured by this bed. The bed consists of sulfided activated carbon. The shifted gas is preheated upstream of the carbon bed using MP steam to avoid condensation within the bed.

The shifted gas exiting the mercury removal bed is finally cooled by cooling water and routed to the Acid Gas Removal unit. Condensed water collected in this second series of exchangers is sent to the ammonia stripper in the Gasification section.

Acid Gas Removal Unit (Selexol®)

As depicted in Figure 2-6, the Untreated Feed Gas (Stream S1) enters the unit battery limits and is combined with a stream of concentrated CO2 which has been stripped from the solvent in the solvent regeneration section. This combined stream is sent to the H_2S Absorber, where it contacts cold, loaded solvent. In the H_2S absorber, H_2S, COS, some CO_2 and low levels of other gases such as hydrogen, are transferred from the gas phase to the liquid phase. The treated gas exits the H_2S absorber and is then sent to the CO_2 absorber.

In the CO_2 absorber, the gas contacts chilled, flash-regenerated solvent. Co-absorbed H_2 recovered in the flash process is recompressed, cooled and recycled to the CO_2 absorber. In the CO_2 absorber, CO_2 and low levels of other gases are transferred from the gas phase to the liquid phase. The Treated Gas exits the CO_2 absorber. The Treated Product Gas (Stream S2) is sent out of the Selexol unit battery limits.

The solvent exiting the H_2S absorber is termed rich solvent, as it contains a significant amount of H_2S, some CO_2 and other gases. The rich solvent exits the H_2S absorber and is pumped through a heat exchanger where its temperature is increased by heat exchange with the lean solvent from the stripper. A portion of the CO_2, CO, H_2 and other gases are selectively stripped from the rich solvent. This stream is mixed with the feed gas, as described above.

The rich solvent is sent to the stripper where the solvent is regenerated and the acid gases are transferred to the gas phase. The acid gases from the stripper are cooled and the condensate is removed. The acid gases are sent out of the Selexol unit battery limits to the Claus Unit (Stream S6). The lean solvent exiting the bottom of the stripper is used to heat rich solvent as described above. The temperature of the lean solvent is further reduced and the lean solvent is then sent to the top of the CO_2 absorber.

The solvent exiting the CO_2 absorber is termed loaded solvent and contains some hydrogen and other product gases, but only trace amounts of H_2S. The loaded solvent is flashed and hydrogen and other gases are transferred to the gas phase. These gases are separated from any condensate, compressed and are sent back to the CO_2 absorber. The solvent is further regenerated by decreasing its pressure in a series of flash drums. These flash drums are termed the High Pressure-, Medium Pressure-, and Low Pressure-Flash Drums. In these drums, large amounts of the absorbed gases, primarily CO_2, are transferred from the liquid phase to the gas phase. The evolved gas exits its respective drum and exits the unit battery limits (Streams S3, S4, and S5).

The flash-regenerated solvent is chilled and sent back to the CO_2 Absorber. The pressure levels in the High-Pressure-, Medium Pressure-, and Low-Pressure Flash Drums are set to match the expected inlet pressures of various stages of a multi-stage compressor.

H_2 Coproduction (PSA) Unit

A portion of the treated gas leaving the Selexol unit is treated in the PSA unit to produce high purity H_2 for export. The PSA produces a product hydrogen stream at pressure and a tail gas stream which consists of the remaining fuel gas components mostly CO, CO_2, H_2, and N_2. The tail gas is compressed and combined with the fuel to the humidification unit.

Fuel Gas Humidification Unit

One of the primary purposes of this humidification unit is to dilute the fuel gas to the gas turbines with moisture to meet the specification of no more than 65 mole% of hydrogen. Fuel gas from the Acid Gas Removal unit is humidified in a column where it is washed with circulating water. The circulating water is heated by shifted syngas in the low temperature gas cooling section. The moisture added to the fuel gas is provided by IP boiler feedwater (BFW) that is extracted from the Heat Recovery Steam Generator (HRSG) units in the power block. The required amount of moisture can be controlled by resetting the recirculating water flow controller, based on the measurements of the hydrogen content, flow rate, temperature and pressure of the feed gas, as well as the temperature and pressure of the humidified fuel gas. Blowdown from the Fuel Gas humidifier is equivalent to 0.5% of the water evaporated in the column. The blowdown is routed to the process wastewater treating unit. The humidified fuel gas and the gas turbine injection nitrogen are heated using hot HP BFW extracted from the HRSGs. The resulting warm HP BFW is pumped back to the power block.

Power Block

The process scheme chosen for the combined-cycle power block is based on two GE 7FB type of gas turbines each with a heat recovery steam generator (HRSG) feeding one steam turbine (the "2 x 1" configuration, i.e., two gas turbine/HRSG trains supporting one steam turbine generator). The interface between the HRSGs and the steam turbine also includes a reheat steam loop. This configuration has been demonstrated in the power industry to be an economical modular design.

The power block consists of the following major systems:

- Gas Turbines
- Extraction Air Heat Recovery / Cooling
- HRSG
- Steam Turbine and the associated Vacuum Condensate System
- Deaerator
- Blowdown System

- Miscellaneous Supporting Facilities (such as Boiler Chemical Injection and Demineralized Water System)

Ambient air is drawn into the gas turbine air compressor via a filter to remove air-borne particulates, especially those that are larger than 10 microns. Air is extracted from the gas turbine and after heat recovery (by generation of MP steam) and cooling is supplied to the ASU. The amount of air extracted is such that the gas turbine net power output is limited to 210 MW per turbine (constrained by the maximum torque limit of the engine shaft). The hot gas turbine exhaust flows through a customized HRSG. The HRSG consists basically of the following sub-systems:

- LP/MP steam
- IP steam
- HP steam
- Reheat steam

In addition to these sub-systems, the HRSG is tightly integrated with the rest of the IGCC plant. The HRSG stack is equipped with a continuous emissions monitoring system (CEMS)

A portion of the MP boiler feedwater (BFW) drawn from the deaerator is routed to the MP steam generator in the Shift/LTGC unit and the waste heat boiler in the Sulfur Recovery Unit. The rest of the MP BFW is sent to the HRSG. It flows through the MP Economizer in the HRSG and feeds the MP steam drum. The saturated steam from the MP steam is mixed with surplus MP steam from other process units and superheated HRSG. The superheated MP steam from the HRSG is injected into the LP section of the steam turbine.

The main BFW pump of the HRSG supplies both IP and HP BFW to the IP and HP steam systems. It is a multistage centrifugal pump, with an intermediate bleed to support the IP steam system. The discharge pressure of the BFW pump is dictated by the design conditions set at the inlet of the steam turbine.

The IP BFW is taken from a bleed of the main BFW Feed pump. It flows through two IP Economizers in the HRSG. Portion of the preheated IP BFW is routed to the IP Steam Generator in the Shift/LTGC unit and the rest fed to the IP Steam drum. Saturated IP steam generated in the IP steam drum mixes with surplus IP steam from other process units and merges with the reheat steam system.

The discharge from the main BFW Feed pump flows through one HP Economizer in the HRSG. It then mixes with HP BFW returned from other process units and the combined streams are heated in two more HP Economizers. Portion of the preheated HP BFW is routed to the HP Steam Generator in the Shift/LTGC unit and the rest is fed to the HP Steam drum. Saturated HP steam generated in the HP steam drum mixes with surplus HP steam from other process units and then superheated. The superheated HP steam from each HRSG is combined and sent to the inlet of the steam turbine.

A small portion of the main BFW Feed pump discharge is used as attemperator water for the control of the temperature of the superheated steam.

The exhaust steam from the HP section of the steam turbine is returned to the HRSGs for reheat along with the IP steam generated in the HRSG (the reheat temperature is the same temperature as HP steam) and then fed to the LP section of the steam turbine. The steam turbine exhaust is condensed in the water-cooled surface condenser. Makeup water is added to the well of the condenser.

Primary feed streams to the deaerator are the vacuum condensate from the surface condenser of the steam turbine and LP condensate from other process units. The vacuum condensate is pumped to the Shift/LTGC unit where it picks up low temperature heat from the shifted syngas. The warm vacuum condensate is then heated further by the BFW Preheater in the HRSG before being fed to the Deaerator. Hot LP condensate is circulated from other process unit boilers. Some excess LP steam is available from other process units and additional quantity can be extracted from the LP section of the steam turbine. The temperature of the deaerator is controlled by manipulating the LP steam rate to the vessel. The pressure is controlled by varying the amount of steam vent with the dissolved gases.

The continuous blowdown from the steam drums is cascaded from the HP steam drum to the IP steam drum and to the MP steam drum. The blowdown is then drawn from the MP steam drum and routed to a continuous blowdown drum. Flash steam in the continuous blowdown drum is sent to the MP steam drum and the saturated water is letdown into the intermittent blowdown drum. Whenever required, blowdown from each steam drum in the HRSG system can be routed directly to the intermittent blowdown drum. Flash steam from the intermittent blowdown drum is vented to atmosphere and the liquid is collected in Blowdown Sump.

<u>CO_2 Compression and Dehydration Unit</u>

This unit receives CO_2 product streams from the Acid Gas Removal unit and raises its pressure. The CO_2 compression system is designed to raise the pressure of the carbon dioxide to a level just above the critical pressure. The CO_2 is then pumped as a supercritical fluid. The CO_2 compression is considered a packaged unit. Inter-stage cooling is effected with cooling water. The discharge of the last stage is cooled. Any water vapor in the compressed CO_2 stream is then removed by a dehydration unit using glycerol as the drying agent. Any condensate collected in the compression process is routed to the solvent flash drum in the Acid Gas Removal unit.

<u>Sulfur Recovery and Tail Gas Recycle Unit</u>

The purpose of this unit is to convert sulfur compounds in the acid and sour gas streams to elemental sulfur using the Claus process. Ammonia present in the sour gas streams is converted into nitrogen and water by oxidation. Any entrain liquid in the acid gas from the AGR unit is separated and sent to the WWPT ammonia stripper feed drum.
The WWPT Stripper offgas and the vacuum flash overhead are fed to a KO drum for removal of any entrained liquid. Liquid is evacuated from the drum and is also sent to the WWPT ammonia stripper feed drum. A portion of the gas from the acid gas drum is combined with the overhead from the SWS drum and fed to the main burner. Fuel gas

and LP steam (both normally not required) are also provided to the burner to assist in the combustion of ammonia. The sour gas streams are partially oxidized with oxygen from the Air Separation Unit according to the Claus reaction scheme as shown below:

$$H_2S + 3/2O_2 \leftrightarrow SO_2 + H_2O$$

$$2H_2S + SO_2 \leftrightarrow 3S + 2H_2O$$

$$2H_2S + O_2 \leftrightarrow 2S + 2H_2O \text{ (overall reaction)}$$

Hydrogen sulfide also dissociates at high temperatures, forming hydrogen and elemental sulfur as shown below:

$$2H_2S \leftrightarrow 2H_2 + S_2$$

The bulk of the oxygen to the burner is controlled as a "main" stream of oxygen with a smaller, parallel oxygen stream for "trim control" and inputs to the combustion controllers include flow rates of the acid gases and H_2S/SO_2 concentration in the tail gas. The temperature of the burner is maintained at level required for complete thermal decomposition of the ammonia into nitrogen and water vapor as shown below:

$$2NH_3 + 3/2O_2 \leftrightarrow N_2 + 3H_2O$$

The undesirable nitrogen oxide formation may result if an excess of oxygen is present; therefore, precise monitoring and control of the oxygen stream is necessary.
The stoichiometry of the Claus reaction scheme dictates that only one-third of the hydrogen sulfide should be combusted with oxygen to generate the required sulfur dioxide for the Claus reaction. Any excess oxygen will lead to a stoichiometric imbalance of hydrogen sulfide and sulfur dioxide, resulting in lower sulfur recovery.

The effluent from the main burner is combined with the remaining portion of the acid gas feed in the reaction furnace. The gas is then cooled by producing MP Steam in the waste heat boiler. Elemental sulfur in the cooled gas is condensed by producing LP steam. The temperature of the cooled gas (which determines the level of steam produced) is set so that almost all the elemental sulfur is condensed; however, it is set high enough to avoid water condensation and sulfur viscosity issues. The condensed sulfur is separated from the gas in a coalescer section that is integral in the exchanger and is drained by gravity to the sulfur pit.

Because thermodynamic equilibrium limits the extent of conversion that can be achieved in the reaction furnace, two additional catalytic beds in series are supplied to recover the required overall sulfur. To allow for the sulfur conversion to proceed further in each subsequent bed, the elemental sulfur produced is condensed and removed from the gas stream.

The effluent gas from the No. 1 condenser is heated in the No. 1 reheater with HP steam to avoid condensation of sulfur as the conversion reaction proceeds in the catalyst. The

outlet temperature of the gas from the reheater is controlled by varying the HP steam rate. The heated acid gas is routed to the No. 1 Converter where residual hydrogen sulfide and sulfur dioxide react over catalyst to form elemental sulfur and water in the vapor phase. As the Claus reaction is exothermic, a temperature rise develops across the catalyst bed. As in the previous stage, the elemental sulfur in the gas is condensed in the No. 2 Condenser by producing LP steam. The sulfur condensed in the exchanger is drained by gravity to the sulfur pit.

The last stage of conversion again heats the acid gas in the No. 2 Reheater with HP steam. The outlet temperature of the gas from the reheater is maintained by adjusting the HP steam rate. The heated acid gas is routed to the No. 2 Converter where residual hydrogen sulfide and sulfur dioxide react over catalyst to form elemental sulfur and water in the vapor phase. The No. 1 and 2 converters are installed in one vessel with a partition separating the catalyst beds. The elemental sulfur in the gas is condensed in the No. 3 Condenser by producing LP steam. The sulfur condensed in the exchanger is drained by gravity to the sulfur pit.

Air is swept across the sulfur pit and gases released from the molten sulfur in the sulfur pit are removed by the sulfur pit vent ejector using MP steam as a motive fluid and recycled to the reactor furnace. The molten sulfur is pumped to the Degassing and Granulation system.

The effluent gas from the last condenser, called tail gas, still contains small amounts of sulfur dioxide and elemental sulfur compounds and is routed to the Tail Gas Treating Unit (TGTU). The purpose of the TGTU is convert any unreacted sulfur dioxide, carbonyl sulfide (COS) and elemental sulfur vapor in the tail gas to H_2S by hydrogenation.

The tail gas is heated in the with HP steam. The inlet temperature to the hydrogenation reactor is controlled by adjusting the HP steam rate. An analyzer on the tail gas measures the hydrogen content of the stream and, if required, treated fuel gas from the Acid Gas Removal unit is added to the reactor feed (normally no additional hydrogen is required). The heated tail gas is hydrogenated where sulfur compounds are reduced at elevated temperature via the following reactions:

$$SO_2 + 3H_2 \leftrightarrow H_2S + 2H_2O$$

$$COS + H_2O \leftrightarrow CO_2 + H_2S$$

$$S_6 + 6H_2 \leftrightarrow 6H_2S$$

$$S_8 + 8H_2 \leftrightarrow 8H_2S$$

In addition, the following shift reaction occurs:

$$CO + H_2O \leftrightarrow CO_2 + H_2$$

The effluent from the reactor is cooled by producing LP steam. The partially cooled gas is then further cooled in a contact condenser. The gas enters the condenser below the bottom trays and is contacted with caustic so that any sulfur dioxide remaining in the gas is captured. The column bottoms is recycled in a circulating loop and spent caustic is periodically removed from the loop and routed to the effluent bio-treatment unit.
The scrubbed gas then flows up the condenser for direct quenching with water. The water is removed from the chimney tray in the middle of the condenser and cooled in an air cooler followed by a trim cooler with cooling water. If required, sour water is removed from the system to maintain the water balance (flow rate is varied to control the liquid level on the chimney tray). A portion of the water from the cooling loop may also be diverted to the lower section of the condenser to maintain the liquid level in the bottom of the column. The contact condenser overhead gas is mixed with the CO_2-rich sour gas from the Gasification section in the tail gas recycle compressor suction drum to remove entrained liquid. The compressed tail gas is recycled back to the Acid Gas Removal unit.

General Facilities

The plant includes the necessary support and general facilities. The following is a listing of these facilities:

- Natural gas supply – for start-up
- Demineralized water system – demineralized water system consists of 2 x 100% mixed-bed exchangers, one in operation and one in stand-by, filled with cation/anion resins, with internal-type regeneration. The package includes facilities for resin bed regeneration, chemical storage and neutralization basin.
- Cooling water system – includes a cooling tower water system.
- Potable water system
- General makeup water supply system
- Oily water separator - oily water from all process units is collected in the oily water sump, which separates the oil from the water by a corrugated plate oil/water separator. Contaminated storm water is also sent to the oily water sump for treatment.
- Drains and blowdowns
- Fire protection and monitoring systems – consists of general firewater system and specialized system for chemical fire protection.
- Plant and instrument air system
- Wastewater treatment system – process wastewater is collected for treatment and the treated water is discharged from the plant. A sanitary wastewater treating unit is included in this system.
- Flare – the flare system consists of collection headers for the process unit relief gases and a system of knockout drums prior to safe disposal in an elevated flare. A separate flare system is provided for the Sulfur Recovery unit.
- Miscellaneous materials (e.g. slag, fine slag, sulfur) handling (unloading and loading facilities)
- In-plant electric power distribution
- Uninterruptible power supply (UPS)

- Generator step-up transformers
- Distributed control system
- Continuous emissions monitoring (CEMS)
- Process analyzers
- Hazardous gas detection system
- Communications
- Laboratory for inspection, certification and process control
- Maintenance, warehouse and administration facility
- Other supporting facilities (e.g. Interconnecting piping; rail spur for construction materials access; roads, paving, parking, fencing and lighting; heating, ventilation and air conditioning systems).

Performance Estimates

As summarized in Table 2-2, the plant consumes 5,660 tonne/d or 6,240 ST/D of coal on an "as received" basis while exporting 1.42 x 10^6 nM^3/d (53.1 MM SCFD) of H_2 (which is equivalent to about 12 % of the coal bound energy on an HHV basis). The plant produces 488 MW of net electric power while capturing 91% of the carbon entering with the coal in the CO_2 stream produced by the plant for sequestration. The overall plant efficacy[1] for this four column Selexol® based case is 39.3%.

The H_2 recovery in the PSA unit for this case is 85% based on data provided by two vendors while producing 99.99% purity H_2. A higher recovery can be achieved but at the expense of generating O_2 at a purity level higher than the 95% used in this study. The optimum combination of O_2 purity and H_2 recovery is dependent on the ratio of H_2 to net electric power produced; the optimum O_2 purity requirement increases with this ratio (of H_2 produced to net electric power produced).

Cost Estimates

The ROM installed plant cost estimate for this Selexol® based case as summarized in Table 2-3 is $947 million (US). The cost of the Selexol unit was developed using ICARUS, an ASPEN Suite product. The cost estimates for the remaining units in the plant were developed by capacity factoring published data on similar units.

COAL BASED NEAR ZERO EMISSION / H_2 COPRODUCTION PLANT WITH CO_2LD Sep^{SM}

The following provides a process description for the corresponding FutureGen type plant configured around the CO_2LD Sep^{SM} process while the major process stream data are summarized in Table 2-4.

[1] Thermal Efficacy = (Energy contained in Exported H_2 on HHV basis + Net Electric Power) / (Energy Contained in Coal on HHV basis)

Process Description and Flow Diagrams

An overall block flow diagram of this FutureGen type plant is given in Figure 2-7. The plant consists of the following major process units similar to the previous Selexol based case except that the Selexol unit is replaced by the CO_2LD Sep^{SM} unit while the Carbon Dioxide Compression Unit is not required since the CO_2 leaves the CO_2LD Sep^{SM} unit at the required pressure, nor is a PSA unit required since the CO_2LD Sep^{SM} unit produces a stream of pure H_2. Furthermore, the feed gas to the Claus unit is significantly different than that in the Selexol based case, the sulfur in the acid gas produced by the CO_2LD Sep^{SM} unit being in the form of COS.

- Air Separation Unit
- Gasification Unit
- CO Shift and Low Temperature Gas Cooling (LTGC)
- Acid Gas Removal Unit (CO_2LDSep)
- Claus Sulfur Recovery and Tail Gas Treating / Recycle Unit
- Fuel Gas Humidification
- Power Block

The necessary general facilities as described in the Selexol based case are also included. A description of the CO_2LD Sep^{SM} process follows:

<u>Acid Gas Removal Unit (CO_2LD Sep^{SM})</u>

As depicted in Figure 2-8, the untreated feed gas (Stream C1) enters the unit and is first sent to a pretreatment unit, which among other things removes the water and any particulates present in the feed. It is necessary to rid the syngas of water due to low operating temperatures in the CO_2LDSep^{SM} Unit.

The dry gas is pre-chilled producing liquid carbon dioxide, which is separated from the gas as product. The chilled gas from the separator is expanded to produce additional liquid carbon dioxide. By chilling the feed to the expander, more condensation of the liquid carbon dioxide occurs for the same expansion ratio.

The liquid carbon dioxide from the expander is separated from the gas in a knockout drum. The combined liquid carbon dioxide and cold gas from the expander is used to chill the feed to the expander for autorefrigeration. The gas is further pretreated to form a hydrogen rich product stream (Stream C2) and a carbon dioxide rich stream.

The carbon dioxide rich stream from the pretreatment step is compressed in an integrally geared compressor. The compressed gas is then sent through second stage of prechilling, expansion and separation resulting in additional liquid carbon dioxide streams and a purge or fuel gas (Stream C3).

There is also an internal purification step, which produces additional carbon dioxide which is combined with the other carbon dioxide streams produced in the unit for export

(Stream C4) and acid gas for sulfur recovery (Stream C5). The required amount of hydrogen for export is taken from Stream C2 while the remainder is combined with Stream C3 and supplied to the gas turbines.

Performance Estimates

As summarized in Table 2-5, this CO_2LDSep^{SM} based Near Zero Emission / H_2 Coproduction plant also consumes 5,660 tonne/d or 6,240 ST/D of coal on an "as received" basis while exporting 1.42 x 10^6 nM^3/d (53.1 MM SCFD) of H_2 (which is equivalent to about 12 % of the coal bound energy on an HHV basis). The plant produces 497 MW of net electric power which is about 2% higher than the Selexol® case while capturing 87.5% of the carbon entering with the coal in the CO_2 stream produced by the plant for sequestration which is lower than the previous Selexol case which has a 91% capture. The overall efficacy for the plant at 39.8% is slightly higher than the Selexol® case.

Cost Estimates

The ROM installed plant cost estimate as summarized in Table 2-6 is $994 million (US) which is about 5% higher than the Selexol® case. The cost of the CO_2LDSep^{SM} unit was provided by Fluor. The cost estimates for the remaining units in the plant were developed by capacity factoring published data on similar units.

TASK 2 - EFFICIENT RECOVERY OF CO_2 IN INTERMEDIATE LEVEL TECHNOLOGY PLANT

The following provides a process description for the Near Zero Emission / H_2 Coproduction plant utilizing Warm Gas Cleanup / Separation (for CO_2 separation / H_2 recovery) technology that is expected to be available in the next 10 to 15 year time frame. The Warm gas Separation is accomplished utilizing a H_2 Separation Membrane Reactor (HSMR).

Process Description and Flow Diagram

An overall block flow sketch for this HSMR based Near Zero Emission / H_2 Coproduction plant is presented in Figure 2-9 while the major process stream data are summarized in Table 2-7. The plant consists of the following major process units:

- ASU (similar to the previous Selexol based case except that the amount of air supplied by the gas turbines is lower while the flow rate of N_2 provided at pressure by the ASU is higher
- Gasification Unit except that each of the gasifiers is equipped with a radiant syngas cooler
- Warm Gas Cleanup Unit
- Sulfuric Acid Unit to convert the SO_2 produced by the sulfur capture unit during the regeneration step

- HSMR unit utilizing IP N_2 supplied by the ASU as sweep gas while producing the fuel gas for the gas turbines and feed gas for a PSA unit
- PSA unit recovers high purity H_2 for export while the tail gas is compressed and combined with fuel gas from the HSMR and supplied to the gas turbines
- CO_2 Compression Unit
- Power Block (similar to the previous Selexol based case except that the amount of air extracted from the gas turbines is lower) while the gas turbines combust a fuel gas that is a mixture of H_2 and N_2 (and small concentrations of the other components present in the clean syngas that may leak to the permeate side within the HSMR).

The necessary general facilities as described in the Selexol based case are also included. The following provides highlights of the plant that are unique to this case.

The plant configuration developed consists of a high pressure O_2 blown entrained bed gasifiers using radiant coolers followed by spray cooling to 333C (the sprays will have to be properly designed to avoid splattering of liquid water on any surfaces; atomization of the water should be beneficial in this regard). The O_2 is supplied by an elevated pressure cryogenic ASU which also produces IP N_2 for utilization in the HSMR. The shifting reaction is driven within the HSMR by constantly separating the H_2 as it is formed through the membrane wall. Thus, a large amount of water vapor need not be introduced into the syngas prior to shifting as is required in the previous Selexol® based case making the radiant syngas coolers (which produce HP steam) suitable [Paolo, Kreutz and Lozza, 2005]. The gasifier type (high-pressure entrained-bed) and its operating conditions as well as the gas turbine model are kept the same as in the previous case in order to better understand the advantages of the HSMR integrated with the ASU and warm gas cleanup.

The gas is then processed in the Warm Gas Cleanup unit before it is supplied to the HSMR to produce the decarbonized fuel gas. The syngas leaving the radiant syngas cooler at 760C is cooled to 333C by partially quenching the gas with water. It then goes to a barrier filter where over 99.99% of the particulates entrained in the syngas are removed. Next the syngas is treated in a nahcolite bed, which removes chlorides as well as the other halides. This is followed by another barrier filter after which it is treated in a transport desulfurizer containing ZnO. The ZnO is converted to ZnS which is then regenerated using air extracted from the gas turbine. During the regeneration operation, the sulfur is released as SO_2 from which the saleable product H_2SO_4 is made.

Warm gas mercury removal processes are being developed and one such process is that being developed by ADA technologies (funded by the EPA and the DOE) that operates around 300 to 400C [Butz 2003] and uses a fixed bed reactor containing an Amended Silicates™ sorbent where the mercury is chemisorbed from the syngas.

The cleaned gas is then supplied to the HSMR consisting of the microporous inorganic membrane. IP N_2 produced by the ASU is used as the sweep gas in the HSMR (flowing on the permeate side counter-currently to the feed syngas flowing on the other side of the membrane wall) to assist in the separation of the H_2 diffusing across the membrane wall.

The H_2-N_2 mixture leaving the HSMR is supplied to the gas turbines as fuel gas. The IP N_2 as sweep gas assists in the separation of the H_2 by decreasing the partial pressure of the H_2 on the permeate side. The total pressure of gases on the permeate side may thus be increased such that the H_2-N_2 mixture may be fed directly to the gas turbines at the required pressure without requiring costly cooling, compression and preheating. An added advantage is that the total pressure differential across the membrane wall is reduced. The N_2 in the fuel gas functions both as a thermal diluent for NOx control and as additional motive fluid for expansion in the turbine.

A portion of the H_2-N_2 mixture is sent to the PSA unit for recovering high purity H_2 for export while the tail gas leaving the PSA unit containing the N_2 along with un-recovered H_2 is compressed and then combined with the remainder of the fuel gas (H_2-N_2 mixture) and supplied to the gas turbines. Note that as in the previous Selexol case, the high purity H_2 leaving PSA unit is at about 2,400 kPa (essentially at the same pressure as the inlet gas to the PSA) and no compression of this stream is required before it is supplied to the pipeline.

The CO_2 rich non-permeate gas from the HSMR contains residual amounts of combustibles which are oxidized in a catalytic combustor using O_2, cooled while recovering the heat and then compressed to the export pressure required for pipelining the CO_2 for sequestration. Note that the CO_2 rich stream leaving the HSMR is at high pressure (4,100kPa) and so the compression power is minimized.

The combined cycle plant is similar to the previous Selexol® case except that the fuel consists of the H_2-N_2 mixture.

Performance Estimates

Performance and cost estimates were obtained from two different vendors for the PSA unit. The H_2 recovery was quoted at 70% by one vendor and 75% by the other while for the previous Selexol based case, both vendors quoted 85% H_2 recovery (for this HSMR case, the vendor who quoted the lower H_2 recovery quoted a higher cost for the PSA unit). Ranges are presented for the overall plant performance and cost estimates based on the 70% and the 75% H_2 recovery cases.

As summarized in Table 2-8, this HSMR based Near Zero Emission / H_2 Coproduction plant also consumes 5,660 tonne/d or 6,240 ST/D of coal on an "as received" basis while exporting 1.42 x 10^6 nM^3/d (53.1 MM SCFD) of H_2 (which is equivalent to about 12 % of the coal bound energy on an HHV basis). The coal feed rate for this case was kept the same as the previous Selexol based case by adjusting the amount of air extracted from the gas turbine while constraining the net output of each of the gas turbines to 210 MW. By maintaining the same coal feed, it is expected that the effect of the uncertainties in the plant cost estimates of units that are common between the two cases is minimized and a more meaningful comparison of the relative economics of the two cases is derived.

The plant produces 533 to 535 MW of net electric power which is 9 to 10% higher than the Selexol® case for the same amount of coal gasified while capturing essentially all the carbon converted to a gas within the gasifier. The overall plant efficacy for the four column Selexol® based case was 39.3% while that for the HSMR based case is 41.8 to 42.0% (it should be noted that the efficacy difference between the two cases is dampened by the inclusion of the energy of the exported H_2). The degree of CO_2 capture for the Selexol® based cases was 91% while that for the HSMR based case is greater than 95%, limited by the minor amounts of other CO_2 and CO that would co-diffuse and any mechanical leakages in the HSMR. Co-diffusion of H_2O which has similar effective molecular diameter as H_2 should be minimized from an overall plant efficiency standpoint. Membrane consisting of two layers, one with larger pore size (where Knudsen diffusion controls) forming the layer adjacent to the reaction side should be beneficial. In this manner, the vast difference in molecular weights of H_2 and H_2O can be taken advantage of in assisting the separation through this Knudsen diffusion controlled layer.

Cost Estimates

Next, rough order of magnitude installed plant cost estimates are compared for the HSMR based (see Table 2-9) and the Selexol® based (see Table 2-3) cases. The geometry of HSMR unit is assumed to be similar to that of a tubular reactor (tubes containing the shift catalyst) or a shell and tube heat exchanger with the feed syngas flowing inside the tubes constructed out of the microporous inorganic membrane material supported by a porous metal structure while the sweep gas along with the permeate flow on the shell side. The cost of this unit is developed by adding the fabrication and other material costs of $\$1,500/m^2$ [Paolo, Kreutz and Lozza, 2005] to the cost of the microporous inorganic membrane material (as stated earlier, projectd at ~ $\$1,000/m^2$). A permeance of 1.1×10^{-6} kg $H_2/s/m^2/kPa$ [Longanbach et. al., 2002] is utilized in estimating the size of the HSMR.

The estimated total installed cost for the Selexol based plant is $948 million and that for the HSMR based case is $1,016 to 1026 million which is about 7 to 8% higher while the amount of power generated is 9 to 10% higher than that of the Selexol based case. An effective cost of electricity is calculated by adding to the net electrical energy generated by the plants, the electric equivalent of the energy contained in the exported H_2 utilizing an efficiency of 60% on an LHV basis. The 10th year effective levelized cost of electricity (Appendix D summarizes the various assumptions made for this analysis) for the HSMR based case has a value of $48.03 to 48.53/MWh and is about 1 to 2% lower than that of the Selexol based case which is at $49.11/MWh. It should be noted that the advantage of the HSMR based case will be higher at higher coal prices since the HSMR based case is significantly more efficient for electric power generation.

The major cost component in the case of the HSMR based plant is due to the radiant syngas coolers. A significant reduction in plant cost may be realized by eliminating these coolers, i.e., by utilizing the same quench design as employed in the Selexol case. Some efficiency will be sacrificed and the trade-off between loss of efficiency and savings in capital cost should be the subject of future study.

TASK 3 - EFFICIENT RECOVERY OF CO_2 IN ADVANCED TECHNOLOGY PLANT

The following provides a process description for the Near Zero Emission / H_2 Coproduction plant utilizing Warm Gas Cleanup / Separation (for H_2 recovery) technology along with an advanced power generation technology consisting of the GRAZ Cycle and a large scale ITM unit that may be available in the time frame of this advanced technology plant. The Warm Gas Separation of the H_2 is accomplished utilizing a H_2 Separation Membrane Reactor (HSMR).

Process Description and Flow Diagram

An overall block flow sketch for this GRAZ Cycle based Near Zero Emission / H_2 Coproduction plant is presented in Figure 2-10 while the major process stream data are summarized in Table 2-10. The plant consists of the following major process units:

- Ion Transport Membrane (ITM) for the Air Separation Unit (ASU) to supply O2 to the gasifier as well as the Graz turbine. This unit includes a gas turbine dedicated to supplying high pressure air to the ITM.
- Gasification Unit with each of the gasifier equipped with a radiant syngas cooler
- Warm Gas Cleanup Unit.
- Sulfuric Acid Unit to convert the SO_2 produced by the sulfur capture unit during the regeneration step. Air is extracted from the gas turbine located in the ASU for the regeneration operation.
- A H_2 Separating Membrane Reactor (HSMR) Unit utilizing steam as sweep "gas" while producing the fuel gas for the ASU gas turbine and H_2 for export.
- CO_2 Compression/Dehydration/Pumping Unit.
- Power Block consisting of the modified GRAZ Cycle.

The necessary general facilities as described in the Selexol based case are also included. The following provides highlights of the plant that are unique to this case.

The plant configuration developed consists of a high pressure O_2 blown entrained bed gasifiers using radiant coolers followed by spray cooling to 400C (the sprays will have to be properly designed to avoid splattering of liquid water on any surfaces; atomization of the water should be beneficial in this regard). The O_2 is supplied by an ITM ASU which also produces the O_2 required by the GRAZ Cycle. The gasifier type (high-pressure entrained-bed along with the radiant syngas cooler) and its operating conditions as well as the turbine technology (firing temperature etc) are kept the same as in the previous case in order to better understand the advantages of the GRAZ Cycle integrated with the ITM unit.

The syngas leaving the radiant syngas cooler at 760C is cooled to 333C by partially quenching the gas with water. The gas is then processed in the Warm Gas Cleanup unit

and a portion of it is supplied to an HSMR to produce decarbonized fuel gas for the gas turbine in the ITM ASU and H_2 for export. The Warm Gas Cleanup unit consists of a barrier filter where over 99.99% of the particulates entrained in the syngas are removed. Next the syngas is treated in a nahcolite bed, which removes chlorides as well as the other halides. This is followed by another barrier filter after which it is treated in a transport desulfurizer containing ZnO. The ZnO is converted to ZnS which is then regenerated using air extracted from the gas turbine. During the regeneration operation, the sulfur is released as SO_2 from which the saleable product H_2SO_4 is made.

Warm gas mercury removal processes are being developed and one such process is that being developed by ADA technologies (funded by the EPA and the DOE) that operates around 300 to 400C [Butz 2003] and uses a fixed bed reactor containing an Amended Silicates^{TM} sorbent where the mercury is chemisorbed from the syngas.

A portion of the cleaned gas is then supplied to the HSMR consisting of the microporous inorganic membrane. Steam is used as the sweep "gas" in the HSMR (flowing on the permeate side counter-currently to the feed syngas flowing on the other side of the membrane wall) to assist in the separation of the H_2 diffusing across the membrane wall. The required amount of H_2-H_2O mixture leaving the HSMR is supplied to the gas turbine in the ITM ASU while the remaining is cooled, condensate separated and then compressed to produce the H_2 for export.

The Power Block consists of a modified GRAZ Cycle. Because of the large amount of high pressure steam being available from the gasification plant, the complete requirement for the thermal diluent in the combustor of the GRAZ Cycle is met by the steam without requiring recycle of gas/vapor to the combustor. Thus, the recycle compressors that are present in a GRAZ Cycle are eliminated simplifying the design significantly. The gas / water vapor mixture separated in the condenser is provided to the CO_2 Compression / Dehydration / Pumping Unit, where the CO_2 is recovered for sequestration after compression, dehydration and pumping to the final pressure of 4,100kPa.

Performance Estimates

As summarized in Table 2-11, this GRAZ Cycle based Near Zero Emission / H_2 Coproduction plant also consumes 5,660 tonne/d or 6,240 ST/D of coal on an "as received" basis while exporting 1.42 x 10^6 nM^3/d (53.1 MM SCFD) of H_2 (which is equivalent to about 12 % of the coal bound energy on an HHV basis). The coal feed rate for this case was kept the same as the previous cases for a more consistent comparison. By maintaining the same coal feed, it is expected that the effect of the uncertainties in the plant cost estimates of units that are common between the two cases is minimized and a more meaningful comparison of the relative economics of the two cases is derived.

Comparing the performance of this Modified GRAZ Cycle based case with the HSMR based case developed under the previous Task 2 (both utilizing Warm Gas Cleanup / Separation), the two plants consume essentially the same amount of coal while exporting the same amount of H_2. The GRAZ Cycle based Near Zero Emission / H_2 Coproduction

plant produces 520 MW of net electric power while the Task 2 HSMR based Near Zero Emission / H_2 Coproduction plant produces 533 to 535 MW of net electric power which is about 3% higher than the GRAZ Cycle case. The overall plant efficacy for the GRAZ Cycle based case is 41.1% while that for the Task 2 HSMR based case is 41.8 to 42.0% (it should be noted that the efficacy difference between the two cases is dampened by the inclusion of the energy of the exported H_2). The degree of CO_2 capture for both the GRAZ Cycle based case and the HSMR based case is greater than 95%.

Cost Estimates

Next, rough order of magnitude installed plant cost estimates are compared for the two cases. The estimated total installed cost for the GRAZ Cycle based plant is $1,045 million (see Table 2-12) while that for the Task 2 HSMR based case is $1,016 to 1026 million (see Table 2-9) which is about 2 to 3% lower while the amount of power generated is almost 3% higher than that of the GRAZ Cycle based case.

As noted previously, the technology used (firing temperature etc) for the high temperature turbine of the GARZ Cycle was kept the same as the gas turbine used in the Task 2 HSMR case (i.e., the F technology) in order to quantify the differences in performance and cost of the two types of plants. The GRAZ Cycle, however is based on utilizing a large scale ITM unit (Advanced Technology plant) while the HSMR based plant (Intermediate Level Technology plant) uses a cryogenic ASU. Based on the results developed in this study for the two cases that use Warm Gas Cleanup / Separation, it appears that the GRAZ cycle even with the use of an ITM does not show any advantage over the Task 2 HSMR based case in plants especially where H_2 export is required.

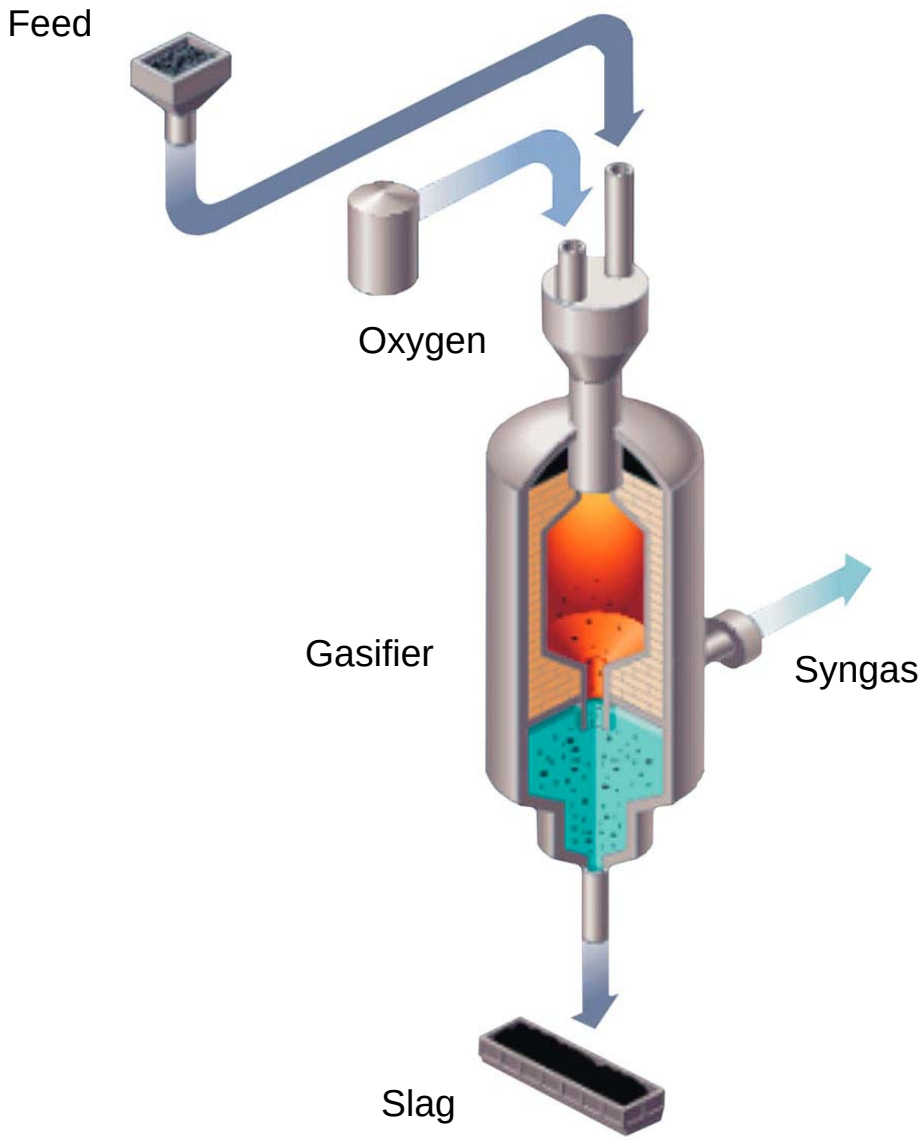

Figure 2- 1: GE Total Quench Gasifier

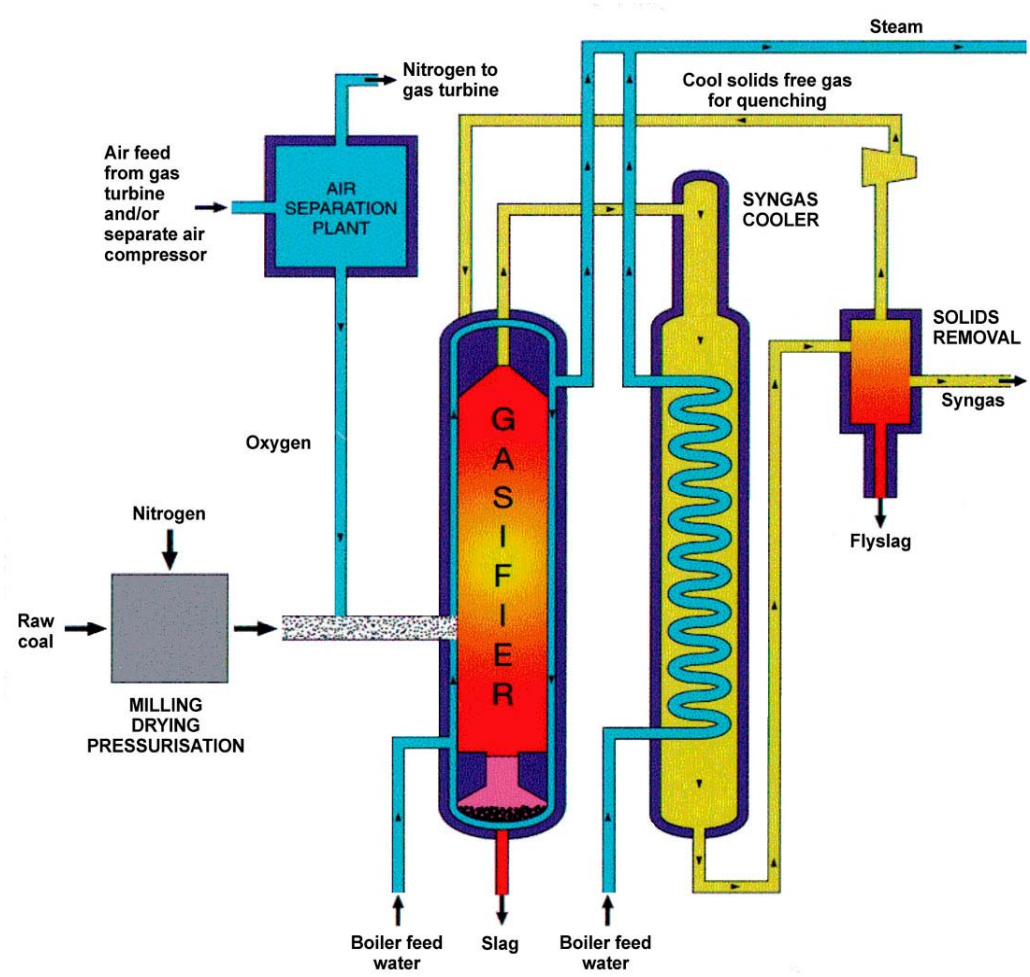

Figure 2- 2: Shell Gasifier

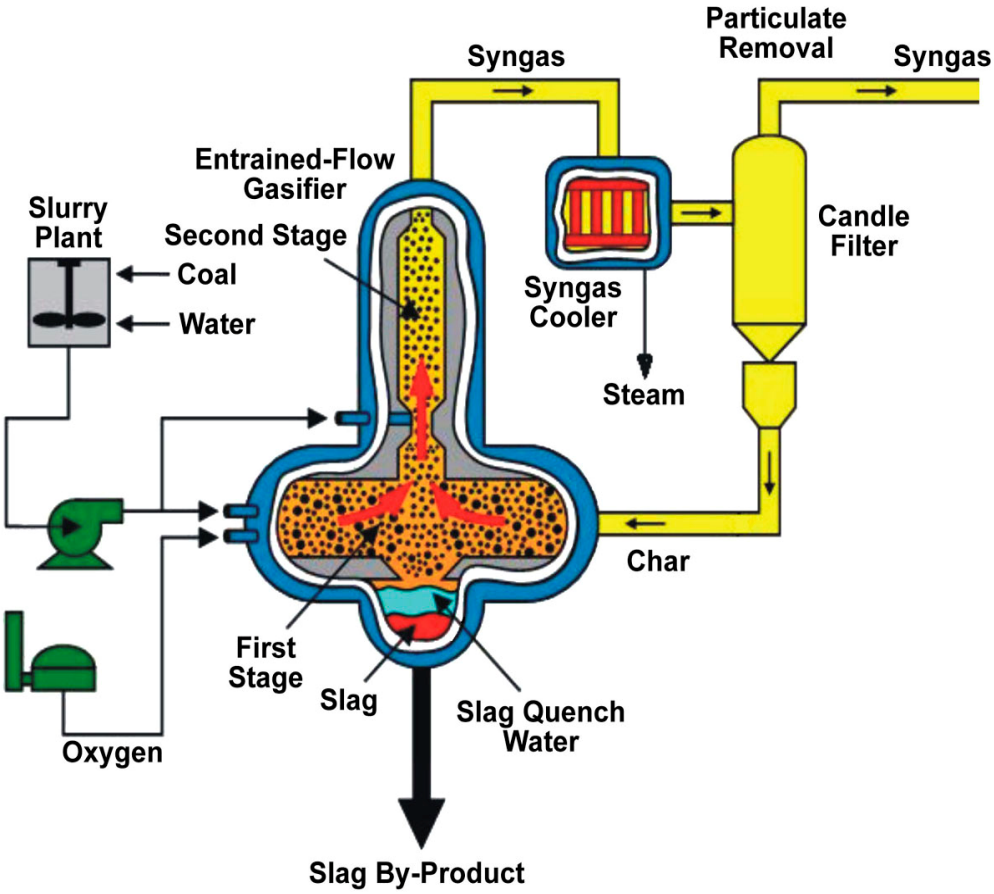

Figure 2- 3: E-Gas Gasifier

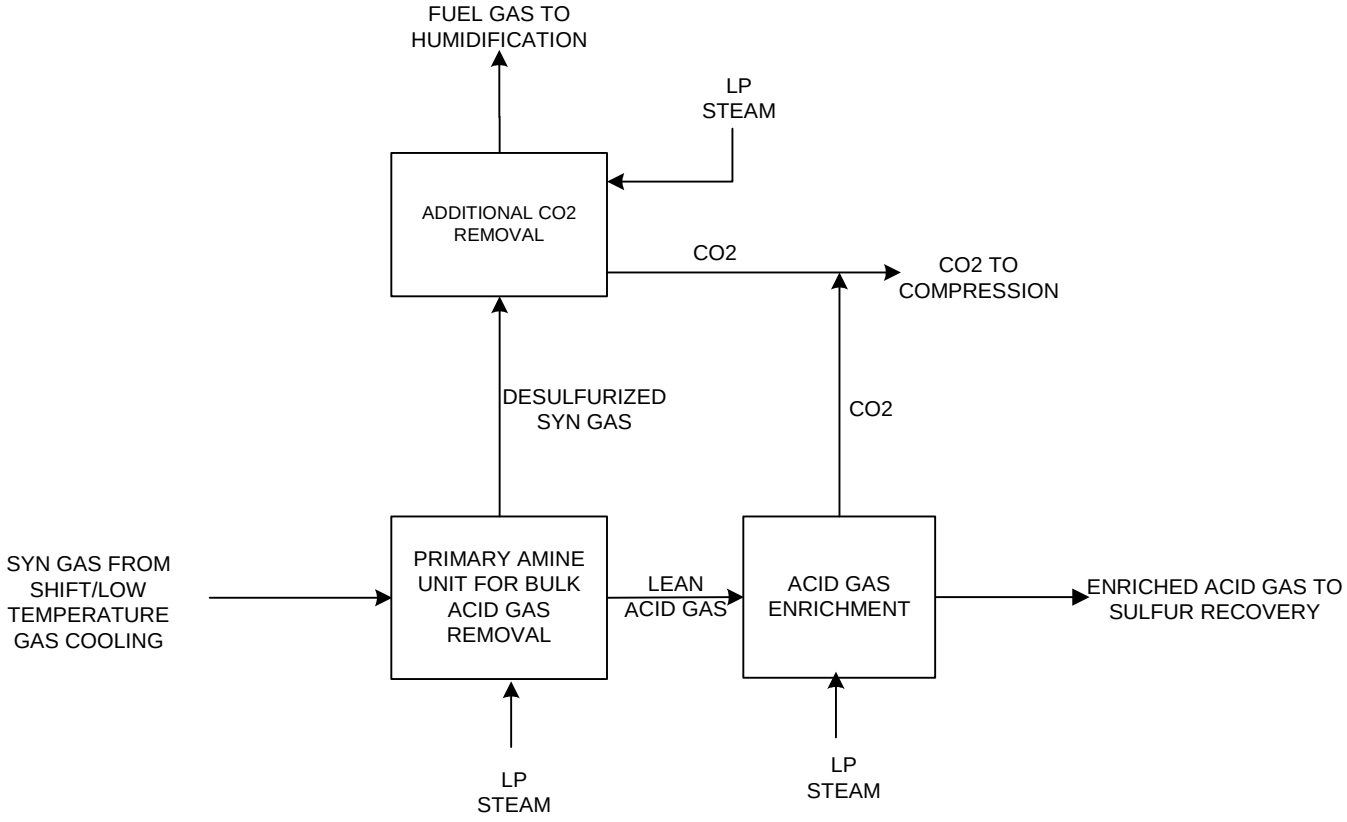

Figure 2- 4: Block Flow Sketch – Acid Gas Removal using the Amine Process

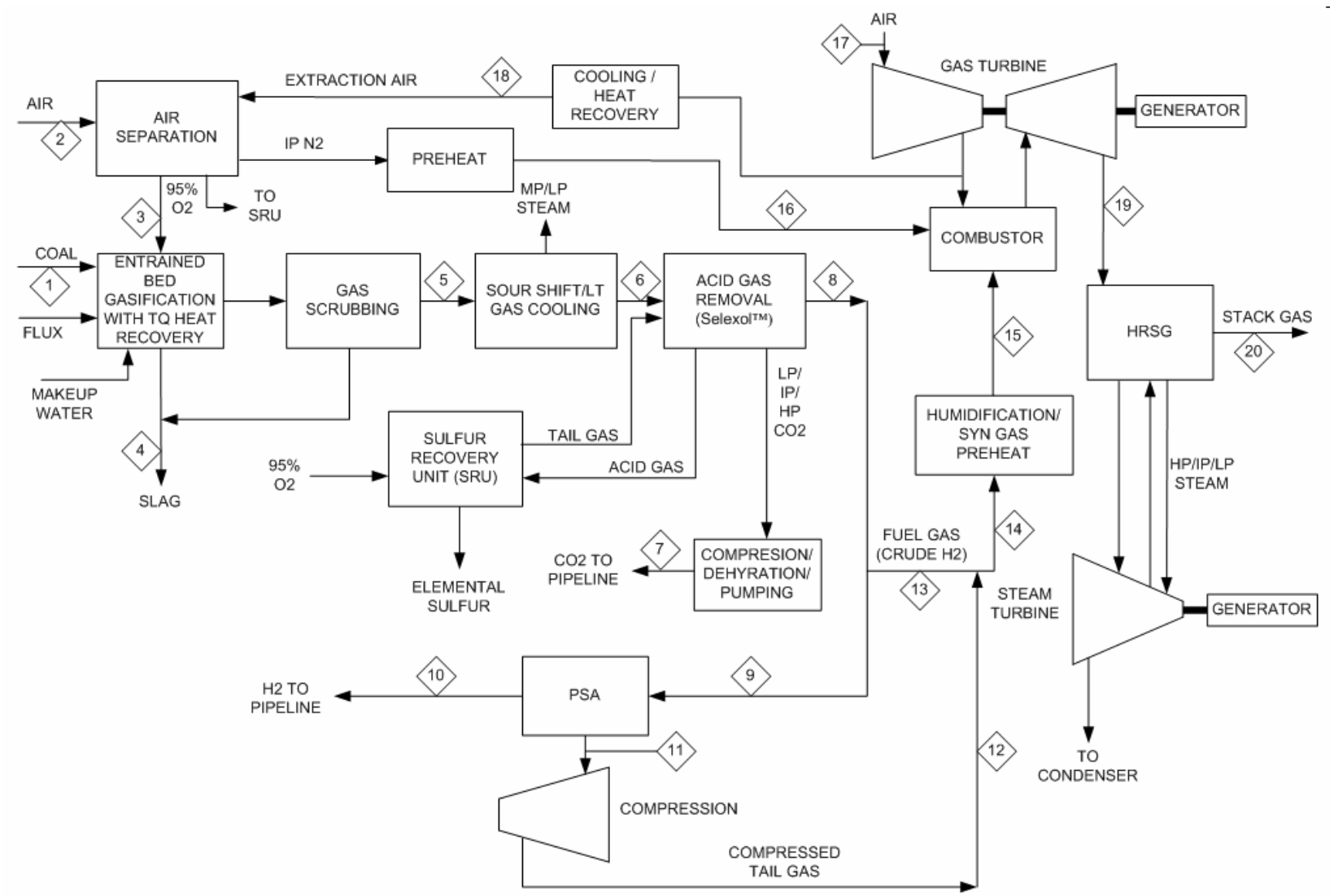

Figure 2- 5: Overall Block Flow Diagram - Near Zero Emission / H_2 Coproduction with Selexol®

Table 2- 1: Stream Data - Near Zero Emission / H_2 Coproduction with Selexol®

Stream No.	1	2	3	4	5	6	7	8	9	10	11	12	13	14	15	16	17	18	19	20
H2, Mole %					15.46	56.57	0.92	93.3	93.3	99.99	67.42	67.42	93.3	92.05	74.24					
H2O		0.99			57.28	0.06		0.01	0.01		0.03	0.03	0.01	0.01	19.37		0.99	0.3	15.4	15.4
N2		77.34	1.76		0.39	0.62	0.01	1.04	1.04		5.01	5.01	1.04	1.22	0.98	98.8	77.3	77.9	72.9	72.9
NH3					0.11															
O2		20.74	95													0.7	20.7	20.9	10.1	10.1
CO					20.8	1.41	0.11	2.29	2.29		11.06	11.06	2.29	2.70	2.18					
CO2					5.09	40.01	98.92	2.25	2.25		10.83	10.83	2.25	2.64	2.13				0.7	0.7
H2S + COS					0.39	0.62														
CH4					0.03	0.05		0.08	0.08		0.40	0.40	0.08	0.1	0.08					
Ar		0.93	3.24		0.41	0.65	0.03	1.09	1.09	0.01	5.26	5.26	1.09	1.28	1.03	0.5	0.93	0.94	0.9	0.9
Solids, kg/s	65.52			7.19																
Total, kg/s	65.52	177.7	53.15	19.34	251.6	163.2	139.8	20.99	3.95	1.49	2.46	2.46	17.04	19.5	37.7	122.7	791.9	45.7	906.6	906.6
Temperature, ºC	15	15	115	50	243	27	45	16	16	16	12	146	16	23	288	288	15	34	586	160
Pressure, bar	1.01	1.01	93.17	1.01	67.23	62.66	138.9	29.6	29.6	27.2	1.48	29.5	29.6	29.5	29.1	28.40	1.01	18.2	1.05	1.01

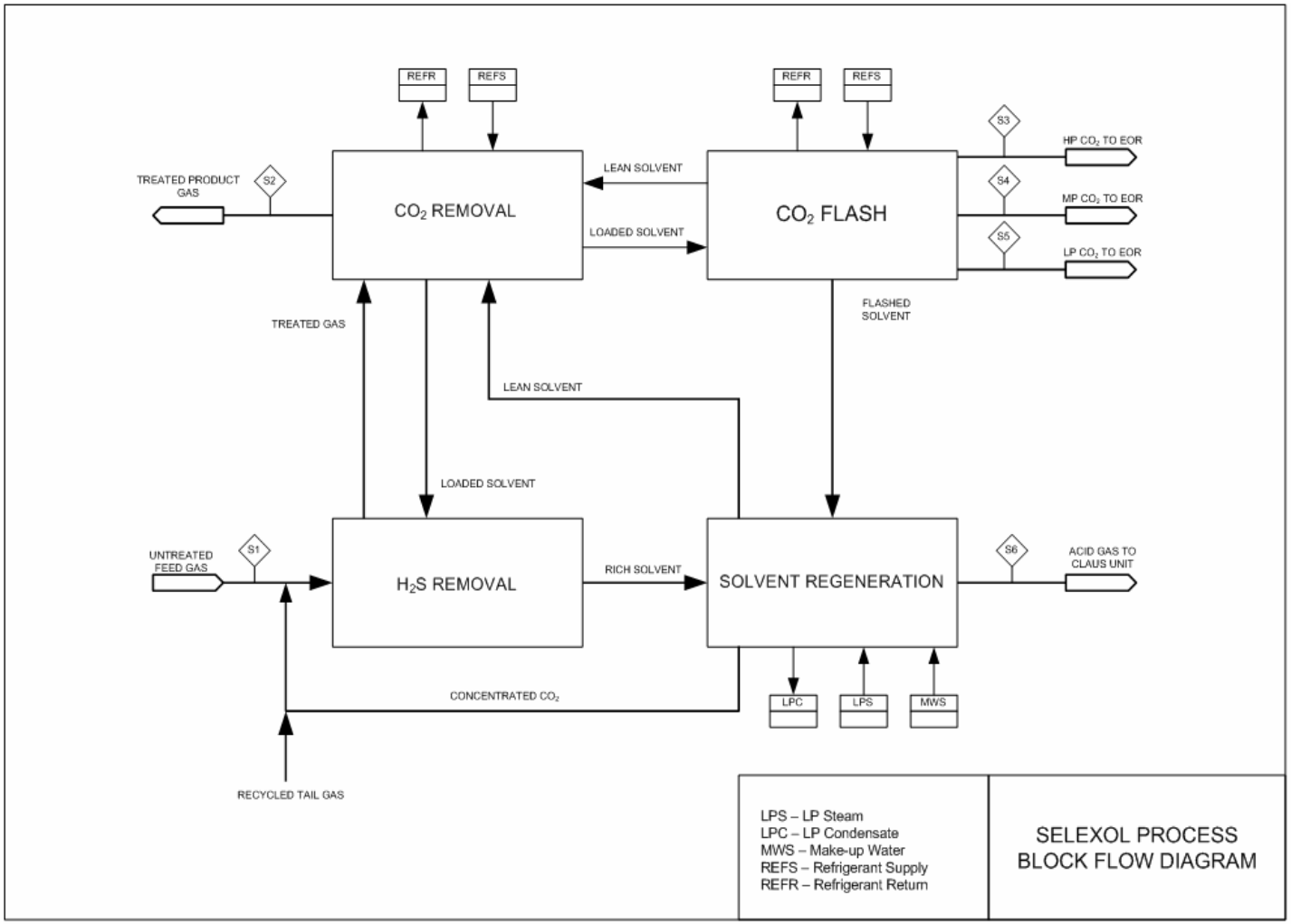

Figure 2- 6: Acid Gas Removal - Near Zero Emission / H_2 Coproduction with Selexol®

Table 2- 2: Performance Summary - Near Zero Emission / H_2 Coproduction with Selexol®

Coal Feed Rate (as Received), MT / D	5,659.86
MWt (HHV)	1,777.61
Gas Turbine Power, MW	420.15
Steam Turbine Power, MW	241.03
Total Gross Power Generated, MW	661.19
Internal Power Consumption	172.96
Net Electric Power (at Generator Terminals), MW	488.22
H_2 Exported, MWt (HHV)	211.05
% of Coal HHV	11.87
1000 Nm^3 / D	1427.43
Kg / D	128,470.00
Carbon Capture, % of Coal Carbon Captured in CO_2 Stream	91
Overall Thermal Efficacy, % HHV	39.34

Table 2- 3: ROM Plant Cost Summary - Near Zero Emission / H_2 Coproduction with Selexol®

Plant Section	Total Plant Cost ($1000, Year 2005 Basis)
Air Separation Unit	105,101
Coal Receiving, Grinding & Slurry Prep	29,238
Gasification	168,693
Low Temp Gas Cooling, Shift & Syngas Humidification	61,480
Acid Gas Removal	74,397
Sulfur Recovery & Tail Gas Recycle	30,017
PSA & Tail Gas Compression	6,514
Power Block	190,138
CO_2 Compression, Dehydration & Pumping	30,526
General Facilities	251,103
TOTAL PLANT COST	947,207

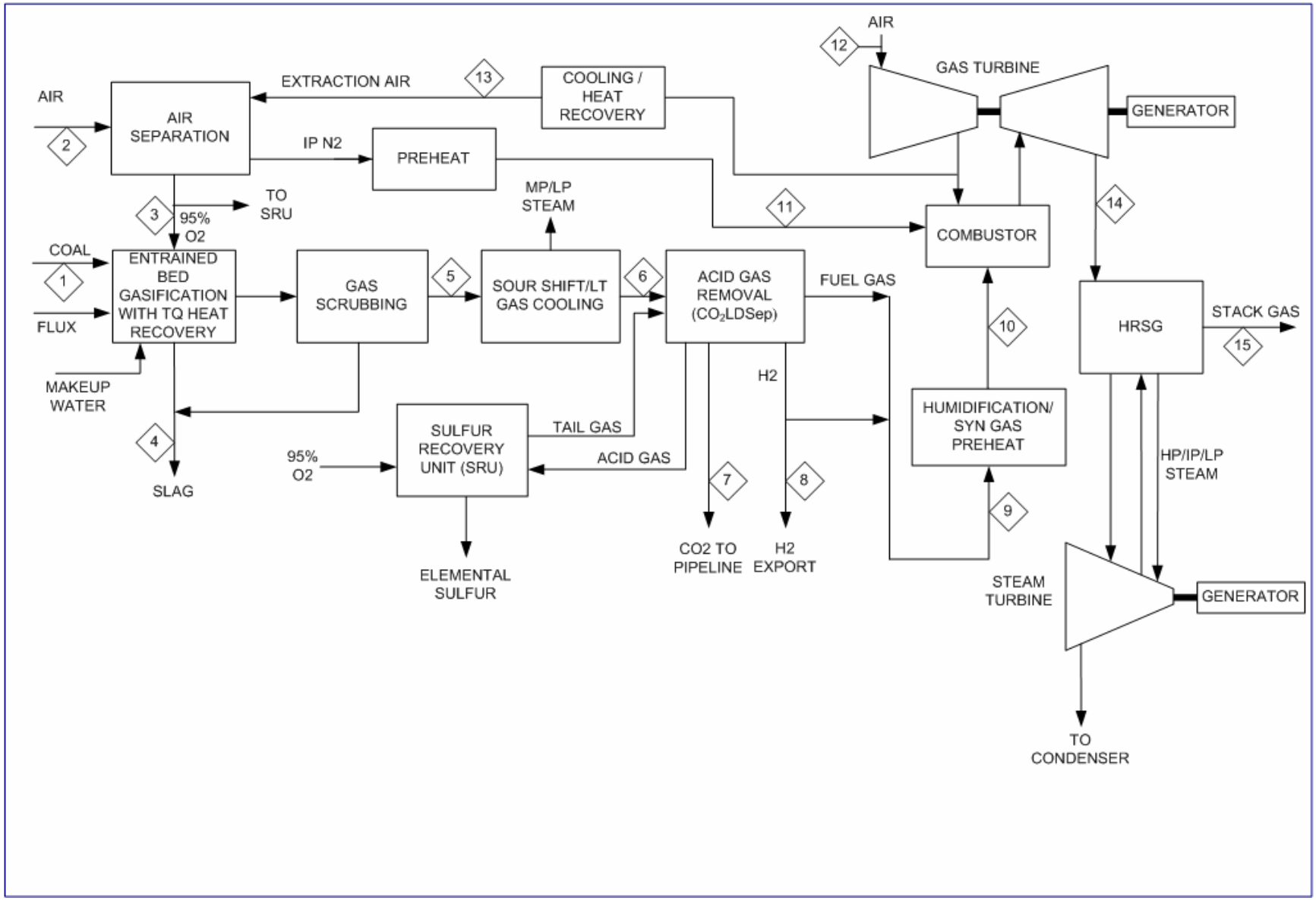

Figure 2- 7: Overall Block Flow Diagram - Near Zero Emission / H_2 Coproduction with CO_2LDSep^{SM}

Table 2- 4: Stream Data - Near Zero Emission / H_2 Coproduction with CO_2LDSep^{SM}

Stream No.	1	2	3	4	5	6	7	8	9	10	11	12	13	14	15
H2, Mole %					15.46	56.57	0.92	100	89.71	73.27					
H2O		0.99			57.28	0.06			0.01	18.34		0.99	0.3	15.2	15.2
N2		77.34	1.76		0.39	0.62	0.01		0.94	0.77	98.8	77.34	77.9	72.62	72.62
NH3					0.11										
O2		20.74	95								0.7	20.74	20.9	10.18	10.18
CO					20.8	1.4	0.11		2.65	2.17					
CO2					5.09	40.02	98.92		5.61	4.58				1.07	1.07
H2S + COS					0.39	0.62									
CH4					0.03	0.05	0.03		0.1	0.08		1.32			
Ar		0.93	3.24		0.41	0.65			0.99	0.81	0.5	0.93	0.94	0.91	0.91
Solids, kg/s	65.52			7.19											
Total, kg/s	65.52	164.77	53.15	19.34	251.6	163.24	133.87	1.4836	25.2	42.83	122.1	820.05	58.74	926	926
Temperature, ºC	15	15	115	50	67	27	45	35	18	288	288	15	34	583	160
Pressure, bar	1.01	1.01	93.17	1.01	64.25	62.66	138.93	29.62	29.62	29.10	28.40	1.01	18.2	1.05	1.01

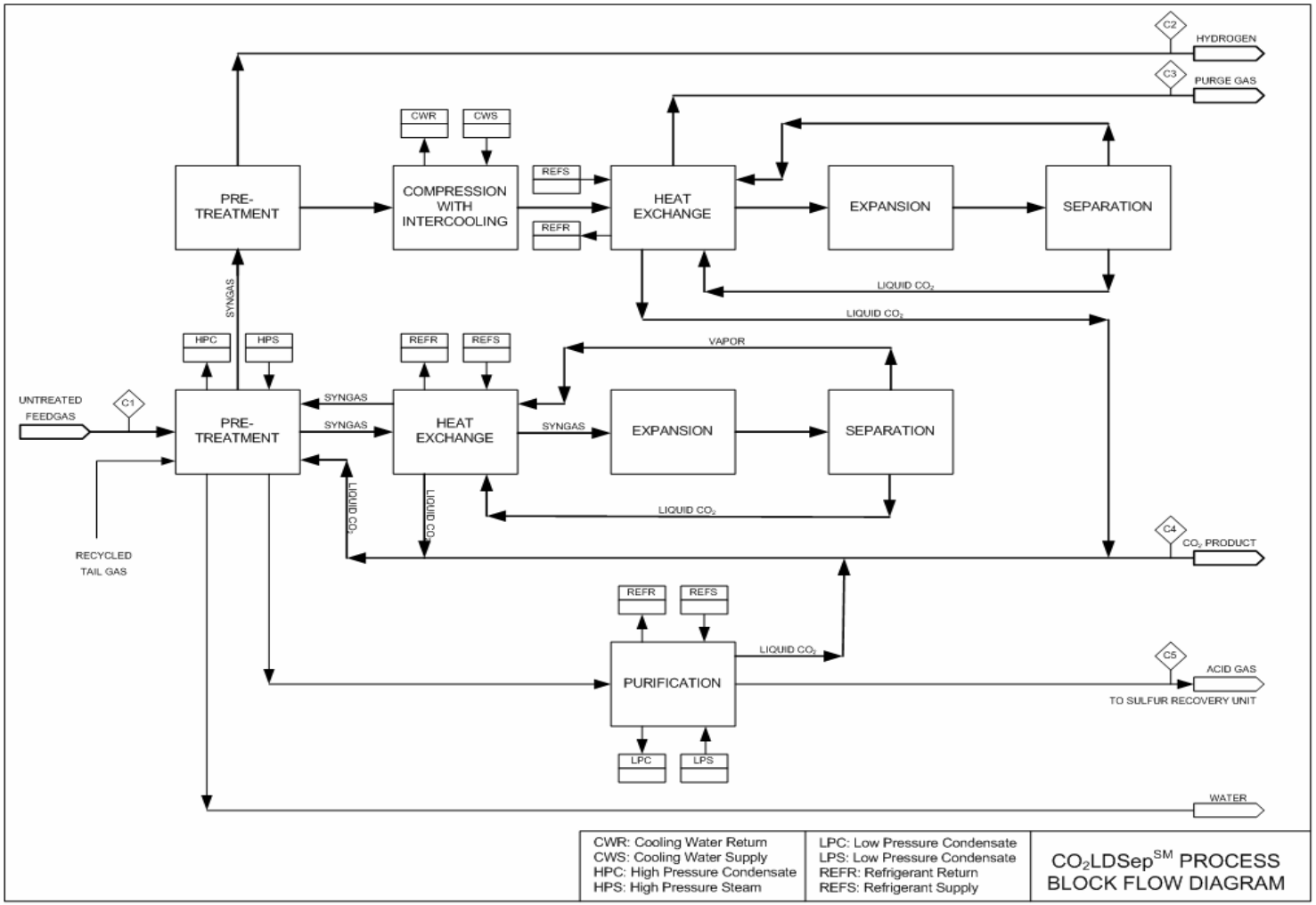

Figure 2- 8: Acid Gas Removal - Near Zero Emission / H_2 Coproduction with CO_2LDSep^{SM}

Table 2- 5: Performance Summary - Near Zero Emission / H_2 Coproduction with CO_2LDSep^{SM}

Coal Feed Rate (as Received), MT / D	5,659.86
MWt (HHV)	1,777.61
Gas Turbine Power, MW	420.06
Steam Turbine Power, MW	250.42
Total Gross Power Generated, MW	670.47
Internal Power Consumption	173.85
Net Electric Power (at Generator Terminals), MW	496.62
H_2 Exported, MWt (HHV)	210.82
% of Coal HHV	11.86
1000 Nm^3 / D	1425.87
Kg / D	128,329.54
Carbon Capture, % of Coal Carbon Captured in CO_2 Stream	87.50
Overall Thermal Efficacy, % HHV	39.80

Table 2- 6: ROM Plant Cost Summary - Near Zero Emission / H_2 Coproduction with CO_2LDSep^{SM}

Plant Section	Total Plant Cost ($1000, Year 2005 Basis)
Air Separation Unit	105,101
Coal Receiving, Grinding & Slurry Prep	29,238
Gasification	168,693
Low Temp Gas Cooling, Shift & Syngas Humidification	66,387
Acid Gas Removal	152,305
Sulfur Recovery & Tail Gas Recycle	30,017
PSA & Tail Gas Compression	0
Power Block	192,139
CO_2 Compression, Dehydration & Pumping	0
General Facilities	249,834
TOTAL PLANT COST	993,714

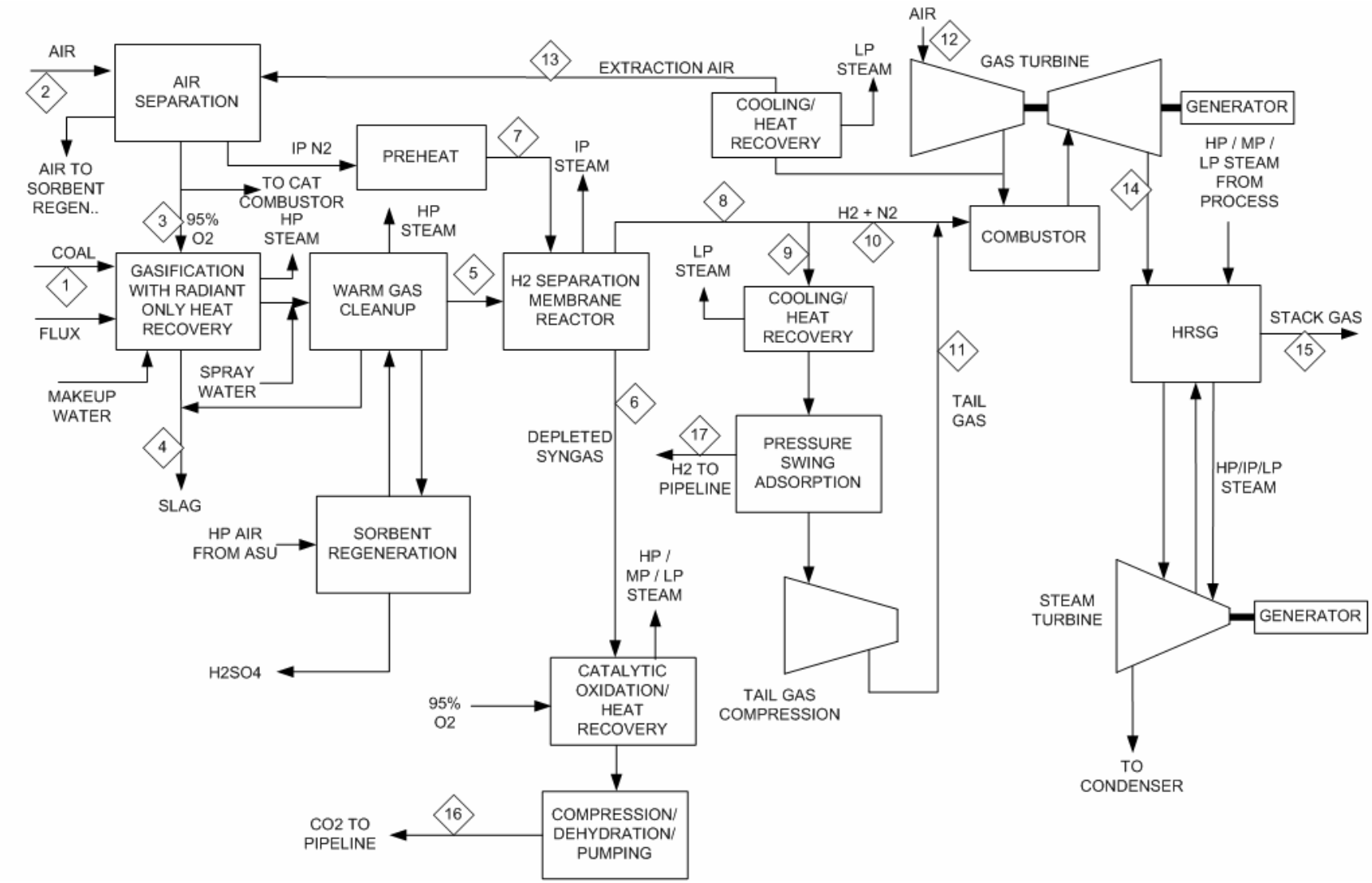

Figure 2- 9: Overall Block Flow Diagram – Near Zero Emission / H_2 Coproduction with H_2 Separation Membrane Reactor

Table 2- 7: Stream Data - Near Zero Emission / H_2 Coproduction with H_2 Separation Membrane Reactor

PSA H2 Recovery = 70%

Stream No.	1	2	3	4	5	6	7	8	9	10	11	12	13	14	15	16	17
H2, Mole %					20.67	1.68		46.27	46.27	46.27	17.71					0.25	100
H2O		0.99			43.65	30.35						0.99	0.3	12.70	12.70		
N2		77.34	1.76		0.52	0.99	98.8	53.08	53.08	53.08	81.30	77.34	77.88	76.26	76.26	1.47	
O2		20.74	95				0.07	0.38	0.38	0.38	0.58	20.74	20.88	10.24	10.24		
CO					27.79	0.15										0.06	
CO2					6.79	65.71										96.65	
CH4					0.04	0.08											
Ar		0.93	3.24		0.54	1.04	0.5	0.27	0.27	0.27	0.41	0.93	0.94	0.8	0.8	1.57	
Solids, kg/s	65.52			7.19													
Total, kg/s	65.52	229.1	53.15	19.34	191.04	181.63	152.42	161.84	36.43	125.41	34.94	758.07	19.61	898.73	898.73	153.5	1.49
Temperature, ºC	15	15	115	50	309	338	288	297	297	297	149	15	34	582	162	58	27
Pressure, bar	1.01	1.01	93.17	1.01	54.59	46.67	30.89	29.10	29.10	29.10	29.10	1.01	18.21	1.05	1.01	152	23.86

PSA H2 Recovery = 75%

Stream No.	1	2	3	4	5	6	7	8	9	10	11	12	13	14	15	16	17
H2, Mole %					20.67	1.68		46.27	46.27	46.27	17.71					0.25	100
H2O		0.99			43.65	30.35						0.99	0.3	12.70	12.70		
N2		77.34	1.76		0.52	0.99	98.8	53.08	53.08	53.08	81.30	77.34	77.88	76.26	76.26	1.47	
O2		20.74	95				0.07	0.38	0.38	0.38	0.58	20.74	20.88	10.24	10.24		
CO					27.79	0.15										0.06	
CO2					6.79	65.71										96.65	
CH4					0.04	0.08											
Ar		0.93	3.24		0.54	1.04	0.5	0.27	0.27	0.27	0.41	0.93	0.94	0.8	0.8	1.57	
Solids, kg/s	65.52			7.19													
Total, kg/s	65.52	229.1	53.15	19.34	191.04	181.63	152.42	161.84	34.00	127.84	32.52	758.07	19.61	898.73	898.73	153.5	1.49
Temperature, ºC	15	15	115	50	309	338	288	297	297	297	149	15	34	582	162	58	27
Pressure, bar	1.01	1.01	93.17	1.01	54.59	46.67	30.89	29.10	29.10	29.10	29.10	1.01	18.21	1.05	1.01	152	23.86

Table 2- 8: Performance Summary - Near Zero Emission / H_2 Coproduction with H_2 Separation Membrane Reactor

PSA H_2 Recovery	**70**	**75**
Coal Feed Rate (as Received), MT / D	5,659.86	5,659.86
MWt (HHV)	1,777.61	1,777.61
Gas Turbine Power, MW	420.00	420.00
Steam Turbine Power, MW	285.64	285.79
Total Gross Power Generated, MW	705.3	705.79
Internal Power Consumption	172.28	170.46
Net Electric Power (at Generator Terminals), MW	533.02	535.34
H_2 Exported, MWt (HHV)	210.79	210.79
% of Coal HHV	11.86	11.86
1000 Nm^3 / D	1425.68	1425.68
Kg / D	128,312.08	128,312.08
Carbon Capture, % of Coal Carbon Captured in CO_2 Stream	>95	>95
Overall Thermal Efficacy, % HHV	41.84	41.97

Table 2- 9: ROM Plant Cost Summary - Near Zero Emission / H_2 Coproduction with H_2 Separation Membrane Reactor

Plant Section	Total Plant Cost ($1000, Year 2005 Basis)	
PSA H_2 Recovery	**70**	**75**
Air Separation Unit	105,101	105,101
Coal Receiving, Grinding & Slurry Prep	29,238	29,238
Gasification	245,524	245,524
Warm Gas Cleanup	98,001	98,001
HSMR for GT Fuel	63,105	63,105
PSA & Tail Gas Compression	23,633	13,139
Power Block	199,447	199,544
CO_2 Compression, Dehydration & Pumping	12,525	12,525
General Facilities	250,065	249,985
TOTAL PLANT COST	1,026,639	1,016,162

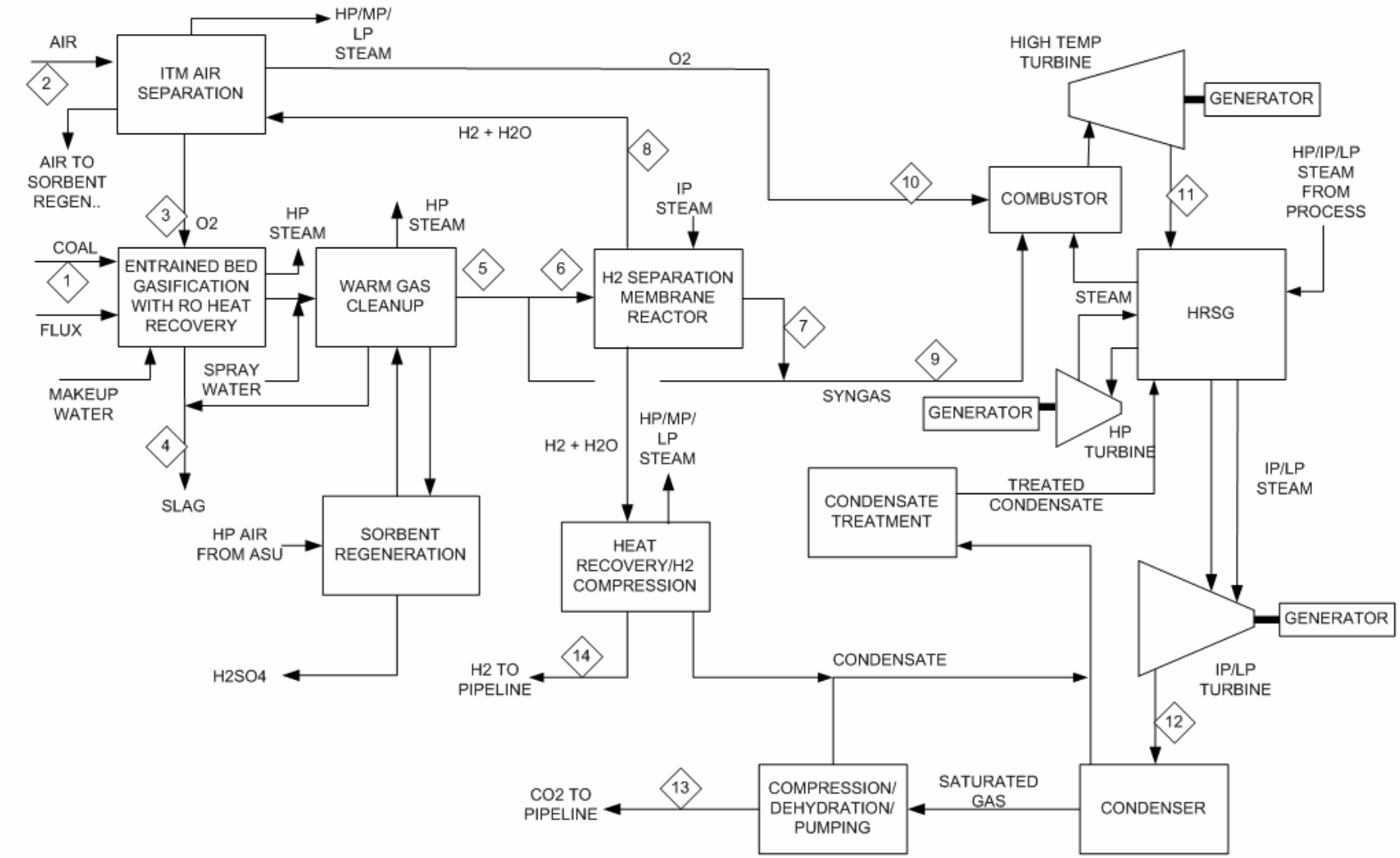

Figure 2- 10: Overall Block Flow Diagram - Near Zero Emission / H_2 Coproduction with GRAZ Cycle

Table 2- 10: Stream Data - Near Zero Emission / H_2 Coproduction with GRAZ Cycle

Stream No.	1	2	3	4	5	6	7	8	9	10	11	12	13	14
H2					29.93	29.93	3.45	47.84	15.42					99.87
H2O		0.99			16.85	16.85	2.59	52.16	9.04		73.72	71.5		0.13
N2		77.34			0.34	0.34	0.6		0.48		0.15	0.16	0.57	
NH3														
O2		20.74	100							100	3.03	3.29	11.54	
CO					42.69	42.69	12.66		26.24					
CO2					10.17	10.17	80.66		48.79		23.1	25.05	87.89	
CH4							0.04		0.03					
Ar		0.93			0.02	0.02								
Solids, kg/s	65.52			7.19										
Condensate, kg/s												113.02		
Total, kg/s	65.52	723.46	51.77	19.34	129.9	88.53	98.84	44.44	140.21	44.65	360.59	453.13	164.81	1.5
Temperature, ºC	15	15	107	50	400	400	419	251	411	160	596	39	68	27
Pressure, bar	1.01	1.01	93.17	1.01	69.08	69.08	59.06	13.54	59.06	43	1.05	0.1	138.93	28.13

Table 2- 11: Performance Summary - Near Zero Emission / H_2 Coproduction with GRAZ Cycle

Coal Feed Rate (as Received), MT / D	5,659.86
MWt (HHV)	1,777.61
ITM Gas Turbine Power, MW	107.17
GRAZ Cycle Turbine Power, MW	626.98
Total Gross Power Generated, MW	734.15
Internal Power Consumption	214.20
Net Electric Power (at Generator Terminals), MW	519.96
H_2 Exported, MWt (HHV)	210.79
% of Coal HHV	11.86
1000 Nm^3 / D	1425.68
Kg / D	128,312.08
Carbon Capture, % of Coal Carbon Captured in CO_2 Stream	97.99
Overall Thermal Efficacy, % HHV	41.11

Table 2- 12: ROM Plant Cost Summary - Near Zero Emission / H_2 Coproduction with GRAZ Cycle

Plant Section	Total Plant Cost ($1000, Year 2005 Basis)
Air Separation Unit	159,707
Coal Receiving, Grinding & Slurry Prep	29,238
Gasification	245,524
Warm Gas Cleanup	100,172
HSMR for Gas Turbine Fuel	31,303
H_2 Compression	1,632
Power Block	154,799
CO_2 Compression, Dehydration & Pumping	73,714
General Facilities	248,881
TOTAL PLANT COST	1,044,970

RESULTS AND DISCUSSION – PHASE 3

TASK 1 - ADVANCED TURBINE AND TURBINE SYSTEMS ASSESSMENT

The objectives of this task are to define gas turbine technology needs for high performance coal gasification-based power plants with criteria pollutants controlled to limits foreseeable for a given time frame. These plants will also be able to limit carbon emissions and coproduce H_2 cost effectively. Stretch goals for 2015 to 2020 time frame are defined.

The primary focus is assessment of technology issues and the identification of gas turbine based cycles and engine configurations suitable to coal-based gasification applications. Literature searches are performed in order to identify cycles that may have a potential in such applications. Systems analyses in order to define balance of plant technology, heat integration, bottoming cycle and interface conditions between gas turbine and balance of plant, performance (emissions, efficiency, power) and costs for each of the selected cycles would be developed if this contract is extended beyond June 2006.

Included as part of this Phase 3 activity is acquiring / providing turbo-machinery in order to gather turbo-charger performance data that may be used to verify models used in hybrid simulations as well as establishing system / equipment design constraints.

Specifically the task consists of:

1. Assessment of technology issues in order to assist the NETL / DOE in defining gas turbine technology issues and development path to resolve issues for advanced turbine cycle configurations.

2. Identification of gas turbine based cycles and engine configurations suitable to coal-based gasification applications along with identifying those cycles that have potential in terms of development time and technology issues.

3. Conceptualization of the balance of plant technology, heat integration, and the bottoming cycle for any of the unique cycles (to be performed if this contract is extended beyond June 2006).

4. Acquiring / providing turbo-machinery in order to gather turbo-charger performance data that may be used to verify models and establishing system / equipment design constraints.

Gas Turbine Technology

A conventional gas turbine cycle consists of pressurizing a working fluid (air) by compression, followed by combustion of the fuel; the energy thus released from the fuel is absorbed into the working fluid as heat (see Figure 3-1). The working fluid with the absorbed energy is then

expanded in a turbine to produce mechanical energy, which may in turn be used to drive a generator to produce electrical power. Unconverted energy is exhausted in the form of heat which may be recovered for producing additional power. The efficiency of the engine is at a maximum when the temperature of the working fluid entering the expansion step is also at a maximum. This occurs when the fuel is burned in the presence of the pressurized air under stoichiometric conditions.

When natural gas is burned with air under stoichiometric conditions, however, the resulting temperature is greater than 1940ºC (3500ºF) depending on the temperature of the combustion air. It is therefore necessary to utilize a large excess of air in the combustion step, which acts as a thermal diluent and reduces the temperature of the combustion products, this temperature being dependent on the gas turbine firing temperature which in turn is set by the materials used in the turbine parts exposed to the hot gas and the cooling medium (its temperature and physical properties) as well as the heat transfer method employed for cooling the hot parts. A fraction of the air from the compressor is bled off as cooling air when air is utilized for cooling, the air being extracted from the compressor at appropriate pressures depending upon where it is utilized in the turbine. From a cycle efficiency and engine specific power output (kW per lb/s of suction air flow) standpoint, it is important to minimize the amount of cooling air.

The necessity to use a large excess of pressurized air in the combustor as well as for turbine cooling when air cooling is employed creates a large parasitic load on the cycle, since compression of the air requires mechanical energy and this reduces the net power produced from the system, as well as reducing the overall efficiency of the system.

Some of the technological advances being made or being investigated to improve the Brayton cycle include the following, in addition to the changes in the basic cycle configuration such as the inclusion of reheat combustion, intercooling (which is justified for very high pressure ratio cycles), recuperation and humidification:

- Rotor inlet temperature of 1700ºC (3100ºF) or higher which would require the development and use of advanced materials including advanced thermal barrier coatings and turbine cooling techniques including closed loop steam cooling
- Advanced combustor liner (combustion air and combustion products being hotter) required due to increases in rotor inlet temperatures
- High blade metal temperature in the neighborhood of ~1040ºC (1900ºF) while limiting coolant amount would again require the development and use of the advanced materials including advanced thermal barrier coatings
- Pressure gain combustor
- Cavity or trapped vortex combustor
- High pressure ratio compressor (greater than 30 to take full advantage of higher firing temperature)
- Integration capability with high temperature ion transport membrane air separation in IGCC applications.

Addition of novel bottoming cycles is yet another approach to improving the overall plant (combined cycle) performance. Overall cycle efficiencies utilizing advanced technology gas turbines approaching 65% on natural gas on an LHV basis may be expected (see Figure 3-2).

Gas Turbine Firing Temperature

Current-state-of-the-art gas turbines have firing temperatures (rotor inlet temperatures) that are limited to about 2600ºF. This increase in firing temperature has been made possible by being able to operate the turbine components (that come into contact with the hot gasses) at higher temperatures while at the same time utilizing closed circuit steam cooling. In a state-of-the-art air-cooled gas turbine with firing temperature close to 1320ºC (2400ºF), as much as 25% of the compressor air may be used for turbine cooling, which results in a large parasitic load of air compression. In air cooled gas turbines, as the firing temperature is increased, the demand for cooling air is further increased. Closed circuit steam cooling of the gas turbine provides an efficient way of increasing the firing temperature without having to use a large amount of cooling air. Furthermore, steam with its very large heat capacity is an excellent coolant. Closed circuit cooling also minimizes momentum and dilution losses in the turbine while the turbine operates as a partial reheater for the steam cycle. Another major advantage with closed circuit cooling is that the combustor exit temperature and thus the NOx emissions are reduced for a given firing temperature; the temperature drop between the combustor exit gas and the turbine rotor inlet gas is reduced since the coolant used in the first stage nozzles of the turbine does not mix with the gasses flowing over the stationary vanes. Note that control of NOx emissions at such high firing temperatures becomes a major challenge. The General Electric (GE) H series gas turbines as well as the Siemens and Mitsubishi G series gas turbines incorporate steam cooling although the GE turbine includes closed circuit steam cooling for the rotors of the high pressure stages. Taking the firing temperature beyond 1430ºC (2600ºF) poses challenges for the materials in the turbine hot gas path. Single crystal blading has been utilized successfully in advanced turbines but in addition to this, development of advanced thermal barrier coatings would be required. Extensive use of ceramics may be predicated.

Use of a reheat or sequential combustor in a gas turbine is an alternative scheme that may be used to limit the firing temperature while gaining efficiency. Such a scheme as depicted in Figure 3-3 has been commercialized by Alsthom in their GT 24 and 26 engines. For a given firing temperature, the gain in combined cycle heat rate is approximately 2% with the use of a reheat combustor. Another advantage is the reduced NOx emission due to both the lower firing temperature and the destruction of some of the NOx that is formed in the first combustor by the reheat combustor. The challenges associated with the design of the reheat combustor are due to the combustion air that consists of a hot (> 650ºC or 1200ºF) vitiated (< 15% by volume) stream.

Gas Turbine Pressure Ratio

The optimum pressure ratio for a given cycle configuration increases with the firing temperature of the gas turbine. Thus to take full advantage of the higher firing temperature of the gas turbine with firing temperature in the neighborhood of 1700ºC (3100ºF) the required pressure ratio may be in excess of 30. Another constraint to also consider is the temperature of the last stage buckets in the turbine. This temperature may have to be limited to about 650ºC (1200ºF) from a

strength of materials standpoint since the last stage buckets in large scale gas turbines tend to be very long and a certain minimum pressure ratio would be required to limit this temperature.

Combustor Developments

Pressure Gain Combustor

A pressure gain combustor produces an end-state stagnation pressure that is greater than the initial state stagnation pressure. An example of such a system is the constant volume combustion in an ideal spark ignited engine. Such systems produce a greater available energy in the end state than constant pressure systems. It has been shown that the heat rate of a simple cycle gas turbine with a pressure ratio of 10 and a turbine inlet temperature of ~1200ºC (2200ºF) can be decreased by more than 10% utilizing such a constant volume combustion system [Gemmen, Richards and Janus, 1994]. Pulse combustion which relies on the inherent unsteadiness of resonant chambers can be utilized as a pressure gain combustor. Research continues at the U.S. DOE and at NASA for the development of pressure gain combustors.

Trapped Vortex Combustor

The Trapped Vortex Combustor (TVC) has the potential for numerous operational advantages over current gas turbine engine combustors. These include lower weight, lower pollutant emissions, effective flame stabilization, high combustion efficiency, and operation in the lean burn modes of combustion. The TVC concept grew out of fundamental studies of flame stabilization and is a radical departure in combustor design using swirl cups to stabilize the flame. Swirl stabilized combustors have somewhat limited combustion stability and can blow out under certain operating conditions. On the other hand, the TVC maintains a high degree of flame stability because the vortex trapped in a cavity provides a stable recirculation zone that is protected from the main flow in the combustor. The second part of a TVC is a bluff body dome which distributes and mixes the hot products from the cavity with the main air flow. Fuel and air are injected into the cavity in a way that it reinforces the vortex that is naturally formed within it.

The TVC may be considered a staged combustor with two pilot zones and a single main zone, the pilot zones being formed by cavities incorporated into the liners of the combustor [Burrus et. al., 2001]. The cavities operate at low power as rich pilot flame zones achieving low CO and unburned hydrocarbon emissions, as well as providing good ignition and the lean blowout margins. At higher power conditions (above 30% power) the additional required fuel is staged from the cavities into the main stream while the cavities are operated at below stoichiometric conditions. Experiments have demonstrated an operating range that is 40% wider than conventional combustors with combustion efficiencies of 99%+. Use of the TVC combustor holds special promise as an alternate option for suppressing the NOx emissions in syngas applications where pre-mixed burners may not be employed. Organizations actively involved in the development of such combustors include General Electric and Ramgen.

Catalytic Combustor

Lean stable combustion can be obtained by catalytically reacting the fuel-air mixture with a potential for simultaneous low NOx, CO and unburned hydrocarbons. It also has the potential for improving lean combustion stability and reducing combustion-induced pressure oscillations. The catalytic combustor can play a special role in IGCC applications to reduce NOx emissions.

IGCC Applications

The H_2O vapor content of the working fluid flowing through the turbine when firing syngas while utilizing water vapor as the diluent, is significantly higher than that in the case when natural gas is the fuel (i.e., compared to the case when natural gas is fired in dry low NOx combustors). The following implications exist for the gas turbine in such applications:

1. Derating of the turbine firing temperature due the different aero-heat transfer characteristics and
2. Life of the thermal barrier coatings, and any ceramics that may be utilized in advanced gas turbines in the future.

Additionally, a gas turbine designed for a certain firing temperature on natural gas would see derating of the firing temperature not only due to the increased concentration of H_2O vapor in the working fluid but also due to the increase in the pressure ratio since the temperature of the cooling air increases as the pressure ratio is increased. In the case of a steam-cooled gas turbine, however, derating of the firing temperature may be less significant (since the cooling steam temperature may be maintained independently of the gas turbine pressure ratio), unless the low pressure air-cooled stages of the gas turbine become the bottleneck.

Furthermore, if dual fuel capability, i.e., operating capability on natural gas and on syngas is required, a large surge margin would be necessary for the compressor with a pressure ratio in excess of 30 and may require a twin-spool aero-compressor for high pressure ratios. Air extraction from the engine to supply the air separation unit may alleviate some of these challenges.

Integration capability with high temperature membrane air separation in IGCC applications may be a requirement in the future when these advanced gas turbines are deployed. Capabilities for extraction of ~ 50% of the compressor discharge air for the membrane unit while introducing hot (~ 1500 ºF) depleted air from it into the gas turbine combustor would be required. Within the combustor, its liner design and materials would be impacted.

Syngas Composition and Thermal Diluents

Table 3-1 shows the composition of a decarbonized syngas (shifted and then 90% of the CO_2 removed) as well as an "un-decarbonized" syngas leaving the acid gas removal unit of a high-temperature slurry-fed entrained-bed gasifier fed with a bituminous coal [EPRI Report, 1991]. The H_2 content of both the syngas streams is considered high enough to preclude the use of current design pre-mixed gas turbine combustors to limit the formation of NOx. Diluent addition is required to the syngas in order to reduce the NOx generation when utilizing "diffusion" type

combustors, the amount of diluent addition required by decarbonized syngas, however, being higher than that required for the un-decarbonized syngas. Two types of diluents are available in an IGCC plant, water vapor introduced into the syngas stream by direct contact of the syngas with hot water in a counter-current column while recovering low temperature waste heat and / or N_2 supplied by an elevated pressure air separation unit. The choice of the diluent depends on a number of factors such as

- amount of low temperature waste heat available for the humidification operation and
- amount of excess N_2 available from the air separation unit.

The amount of low temperature waste heat available in a gasification plant in turn depends primarily on the gasification heat recovery system employed (i.e., the extent to which cooling of the raw gasifier effluent is accomplished in a syngas cooler before the syngas is quenched / scrubbed with water). On the other hand, the amount of N_2 available as a diluent for the gas turbine depends on

- the specific O_2 consumption of the gasifier - the amount of N_2 produced by the air separation unit is lower when the specific O_2 consumption of the gasifier is lower and
- the type of gasifier feed system - dry feed systems utilize significant portions of the N_2 as lock hopper pressurization gas as well as in the drying and transport of the coal into the gasifier and only the remaining amount of N_2 is available for gas turbine injection.

A combination of the two diluents, i.e. water vapor and N_2, may also be utilized, the relative amounts depending on the overall plant integration scheme and the trade-offs between efficiency and capital cost. In such cases, an option available consists of introducing the moisture into the N_2 stream instead of the syngas. When N_2 or moisturized N_2 is utilized as a diluent, it may be either premixed with the decarbonized syngas before supplying it to the combustor of the gas turbine or it may be introduced into the combustor through a separate injector. Premixing the diluents with the syngas versus keeping them separately upstream of the combustor will have implications on the effectiveness of the diluent in lowering the combustion temperature; a diluent entering the combustor premixed with the syngas would be more effective in lowering the NOx than if it entered the combustor through a separate nozzle. On the other hand, some savings in the N_2 compressor horsepower may be realized in the case where the diluent is introduced into the combustor separately if the pressure drop associated with the fuel control valve is much higher than that for the diluent.

It should be noted that the specific heat of the triatomic H_2O molecule is significantly higher than that of the diatomic N_2 molecule on a mole basis and thus the relative amounts of diluents required, i.e. water vapor versus N_2 on a volumetric or mole basis by a given amount of syngas are quite different.

Thus, in summary, the composition of the syngas / diluent are dependent on the type of gasifier, heat recovery and energy integration options and the type of air separation unit, i.e., whether it is an elevated pressure air separation unit which can supply high pressure N_2 for use as a thermal diluent for NOx control.

Gas Turbine Pressure Ratio

The pressure ratio of the gas turbine increases when firing syngas, which is a much lower heat content gas than natural gas. The increase in pressure ratio is dependent upon the amount and nature of the diluent added and the degree to which the compressor inlet guide vanes are closed. The surge margin available in the compressor could thus constrain the amount of diluent that may be added and the resulting NOx emissions, in addition to the constraints set by the combustor design with respect to achieving stable combustion while limiting the CO emissions. Air extraction from the compressor may be required in order to limit the increase in the engine pressure ratio, in which case the extracted air (after cooldown / heat recovery) may be used efficiently in an elevated pressure air separation unit.

Gas Turbine Firing Temperature

The H_2O vapor content of the working fluid flowing through the turbine, especially in the case when decarbonized syngas is the fuel and while utilizing water vapor as the diluent, is significantly higher than that in the case when natural gas is the fuel (i.e., compared to the case when natural gas is fired in dry low NOx combustors). The following implications exist for the gas turbine in such applications:

3. Derating of the turbine firing temperature due the different aero-heat transfer characteristics [Rao and Du Plessis, 2003] and
4. Life of the thermal barrier coatings, and any ceramics that may be utilized in advanced gas turbines in the future.

Additionally, a gas turbine designed for a certain firing temperature on natural gas would see derating of the firing temperature not only due to the increased concentration of H_2O vapor in the working fluid but also due to the increase in the pressure ratio since the temperature of the cooling air increases as the pressure ratio is increased. In the case of a steam-cooled gas turbine, however, derating of the firing temperature due to the increase in pressure ratio may be less significant (since the cooling steam temperature may be maintained independently of the gas turbine pressure ratio), unless the low pressure air-cooled stages of the gas turbine become the bottleneck.

Thus, the choice of the diluent to be utilized, i.e., H_2O vapor versus N_2 or their relative amounts should be included in the trade-off / optimization studies, i.e., take into account not only the gasification island heat recovery options but also the accompanying extent of the gas turbine firing temperature reduction.

Bottoming Steam Cycle

The effect of lowering the firing temperature while increasing the pressure ratio significantly reduces the gas turbine exhaust temperature which has implications on the steam bottoming cycle. With lower steam superheat and reheat temperatures as compared to those corresponding to a natural gas fired combined cycle, the optimum steam cycle pressures would tend to be lower than those for the steam cycle in a natural gas fired combined cycle.

Use of Selective Catalytic Reduction (SCR)

At the present time, gas turbine manufacturers are willing to guarantee 15 ppmV NOx (dry, 15% O_2 basis) for gas turbines in IGCC applications with the requirement of the thermal diluent addition. More stringent NOx emission requirements [e.g., 3 ppmV NOx (dry, 15% O_2 basis)] in the future may require the installation of an SCR for post combustion control of the NOx or advanced gas turbine combustors that generate less NOx such as the trapped vortex combustor [Hsu, Gross, and Trump, 1995].

Development of low NOx combustors has a number of technical challenges to overcome due to the presence of a large concentration of H_2 in the syngas (auto-ignition and flash-back being the challenges with pre-mixed combustor designs). These technical challenges will be even more severe for the more advanced gas turbines which will have higher pressure ratios (to take full advantage of the higher firing temperatures) and thus higher combustion air temperatures than current gas turbines in syngas applications. Decarbonized syngas will make it more challenging since the H_2 content of the decarbonized syngas is significantly increased.

Although SCRs have been utilized in coal fired boiler plants, the application of SCRs in IGCC plants poses special challenges. The NH_3 slip from the SCR is known to react with the SO_3 formed during the combustion process as well as some formed in the SCR itself (depending on the vanadium content of the catalyst) to form salts (ammonium bisulfate, sulfate and bisulfite) as the gases are cooled during heat recovery. Ammonium bisulfate tends to be especially sticky and can deposit on the cooler surfaces of heat transfer equipment causing fouling as well as corrosion. Any unreacted NH_3 that may be emitted to the atmosphere is by itself a pollutant. In the case of a boiler, these problems are less severe since the NH_3 slip from the SCR is preferentially adsorbed onto the flyash while any ammonium salts formed are captured in the particulate control devices. Furthermore, the air preheater in a boiler plant is cleaned periodically by on-line “soot” blowers.

Operating combined cycle plants fired with sulfur bearing fuel oil have shown fouling of the low temperature boiler feed water heater in the HRSG when equipped with an SCR. Note that the salts that do not deposit within the HRSG will be emitted as particulate matter.

The use of SCRs in IGCC applications thus requires a syngas that is very low in sulfur content to reduce the SO_3 content in the gas turbine exhaust. SCRs have been installed in IGCC plants, the API Falconaro plant in Italy and the Negishi plant in Japan [Heaven and DeSouza, 2004; Ono, 2003]. The ISAB IGCC plant in Italy which also has an SCR, uses it only on fuel oil operation and bypasses it during syngas operation [Heaven and DeSouza, 2004]. For the Negishi plant, a syngas with a sulfur content of 8 ppmV is produced with a design maximum of 30 ppmV. No problems associated with salt deposition in the HRSG have been experienced in this plant. Both capital cost and thermal penalties are associated however, with deep sulfur removal in an IGCC for the following reasons:

- A COS hydrolysis unit may be required to convert the COS (which is more difficult to scrub out in the acid gas removal unit) to H_2S; and,
- A large circulation rate is required in the acid gas removal unit for deep sulfur removal.

In the case of an IGCC plant designed for producing a decarbonized syngas using sour shift and an acid gas removal unit to capture the CO_2 and also perform desulfurization of the syngas, most of the COS is hydrolyzed to H_2S in the shift reactors, while due to the very large solvent circulation rate maintained in the acid gas removal unit to capture the CO_2, the sulfur content of the treated syngas is very low. In such cases, the incremental heat rate and cost penalties associated with producing a low sulfur syngas suitable for firing in a gas turbine equipped with an SCR are not significant.

Engine Output

The gas turbine when fired with syngas with diluent addition can be fully loaded to maximize its power output, the limits being the surge margin of the compressor (pressure ratio being increased) and the shaft torque. A nearly "flat rating" of the engine output with respect to the ambient temperature may be realized by opening up the guide vanes as the ambient temperature increases, the compressor inlet guide vanes being typically closed at the lower ambient temperatures to compensate for the larger mass flow rate of the syngas and the diluent.

Novel Cycles

Humid Air Turbine (HAT) Cycle

The mechanical energy required for air compression in the Brayton cycle can be reduced by utilizing interstage cooling. However, from an overall cycle efficiency standpoint, interstage cooling can be utilized advantageously if the heat removed from the compressed air in the intercooler can be efficiently recovered for conversion to power. If the entire heat is simply rejected to the atmosphere, the overall cycle efficiency may actually decrease depending upon the cycle pressure ratio, since it results in the consumption of more fuel to compensate for the energy lost through the intercooler. Only at very high pressure ratios can intercooling be justified in most cycles.

In the HAT cycle [Rao, 1989] a significant portion of the excess air that is required as thermal diluent in a gas turbine, is replaced with water vapor (see Figure 3-4). The water vapor is introduced into the system in an efficient manner, by pumping of a liquid followed by low temperature evaporation. Pumping a liquid requires less mechanical energy compared to gas (air) compression. Evaporation of the water into the compressed air stream is accomplished using low temperature heat, in a counter-current multistage humidification column, rather than generating steam in a boiler. This method of humidification permits the use of low temperature heat for accomplishing the evaporation of water. For example, water which boils at 212°F at atmospheric pressure may be made to evaporate at room temperatures when exposed to a stream of relatively dry air.

The process also reduces the parasitic load of compressing the combustion air by intercooling the compressor, while recovering most of the heat removed in the intercooler for the humidification operation. Thus, a more thermally efficient power cycle is achieved. Humidification of the compressed air also leads to a reduction of NOx emissions. The humid air is preheated by heat exchange with the turbine exhaust in a recuperator to recycle the exhaust energy to the

combustor, thereby eliminating the expensive steam bottoming cycle required in a combined cycle.

The advantages of the HAT cycle are:

- Less than 5 ppmV NOx without post-combustion treatment
- High efficiency without a steam bottoming cycle
- Applicable to micro- and mini-turbines for distributed generation
- Excellent part-load performance, efficiency essentially constant down to 60% of full load
- Performance insensitive to ambient temperature
- Water usage less than that for a combined cycle employing wet cooling tower and if desired, water may be recovered from HAT exhaust
- High specific power
- Integrates synergistically with reliable low-cost "Total Quench" gasifier
- In coal based Zero Emission plants, the "Total Quench Gasifier" option is of choice
- In natural gas Zero Emission based plants where CO_2 is recovered from exhaust, CO_2 concentration is higher (dry basis).

The disadvantages of the HAT cycle are:

- Requires intercooled-regenerative gas turbine for optimum performance
- Compressor / turbine flow mismatch deviates from normal gas path design
- Development cost could be high although possible for compressor / turbine "mix and match"
- Does not take advantage of steam-cooled blade technology (water cooled technology could prove better in advanced machines)
- Use of ceramics in hot gas path may be a challenge due to high moisture content of the working fluid.

Inlet Air Fogging

Another approach to reducing the parasitic load of air compression in a gas turbine is to introduce liquid water into the suction air [Bhargava and Meher-Homji , 2002]. The water droplets will have to be extremely small in size and be in the form of a fog to avoid impingement on the blades of the compressor causing erosion. As the water evaporates within the compressor from the heat of compression, the air being compressed is cooled which in turn causes a reduction in the compressor work. Note that the compression work is directly proportional to the absolute temperature of the fluid being compressed.

A benefit in addition to increasing the specific power output of the engine is the reduction in the NOx due to the presence of the additional water vapor in the combustion air. A number of gas turbines have been equipped with such a fogging system. Care should be taken, however, in specifying the water treatment equipment since high quality demineralized water is required as well as in the design of the fogging system to avoid impingement of the compressor blades with water droplets.

Partial Oxidation Cycle

One form of this cycle is depicted in Figure 3-5. This concept is similar to the previously described reheat cycle except that the first combustor is operated under sub-stoichiometric or partial oxidation conditions [Korobitsyn, Kers and Hirs, 1998; Newby et. al., 1997]. Following the sub-stoichiometric stage, oxidation of the fuel is completed in the second combustor after expansion in the high pressure turbine. This again is an alternative scheme that may be used to limit the firing temperature while gaining efficiency. The absence of excess O_2 in the first stage combustor decreases NO_x formation. Potential challenges are (1) due to the metallurgical issues such as H_2 embitterment and metal dusting within the partial oxidation combustor as well as the high pressure turbine, (2) soot formation within the partial oxidation combustor and (3) design of the high pressure turbine seals to contain the CO and H_2 at the high temperature and pressure. A large addition of steam may be required to circumvent Concerns 1 and 2 while a buffer gas such as N_2 (supplied by the ASU) may be required for the seals (Concern 3). Humidification of the syngas or of the oxidant (as in the case of the HAT cycle described previously) could be used to replace some or all of the steam required by the partial oxidation combustor while utilizing low temperature heat for the humidification operation in order to enhance the overall plant efficiency. The oxidant may consist of O_2 instead of air in the case of a Zero Emission plant that utilizes an Oxy-Fuel Cycle described next.

Oxy-Fuel Cycles

Another promising approach is oxy-fuel combustion for ultra high temperature and high pressure "steam turbines" [Jericha, et. al., 1995; Smith et. al., 2000]. In these systems, the fuel is combusted utilizing a relatively pure O_2 stream to create a working fluid for the turbine composed mostly of water, and CO_2. The design of these systems would facilitate the capture of essentially all of the CO_2 and all of the Clean Air Act criteria pollutants such as NOx and SOx and other unregulated pollutants depending on the purity constraints set for the product CO_2 stream for sequestration. The syngas cleanup system will be simplified significantly resulting in efficiency and capital cost benefits if these criteria pollutants are allowed to be contained in the captured CO_2 stream leaving the plant. Only particulate cleanup would be required in the syngas cleanup process.

These cycles do not require a shift unit upstream of the power block as is done in the other cycles that consist of pre-combustion CO_2 recovery in Zero Emission power plant applications. Thus, from a thermal performance standpoint such cycles have the advantage of not by-passing the thermal energy produced during the exothermic shift reaction around the topping cycle as is done in the other cycles consisting of pre-combustion CO_2 recovery. In the pre-combustion CO_2 recovery based cases, the thermal energy generated in the shift unit enters the bottoming steam cycle directly. In Oxy-Fuel cycles, the CO_2 is captured from the exhaust of the turbine in the condenser. The disadvantage, however, is that the CO_2 thus recovered at low pressure (at sub-atmospheric pressure) and requires a significant amount of compression power to pressure the CO_2 before it may be transported for sequestration. Alternate schemes to extract the CO_2 at higher pressure should be investigated as well as system configurations that produce excess hydrogen for export.

A large amount of O_2 is also required as compared to the pre-combustion CO_2 recovery schemes. An Ion Transport Membrane (ITM) unit would be required to produce the O_2 for both the gasifiers and the power cycle in order to limit the negative effects on the plant performance and cost due to the demand for a large quantity of O_2.

Development needs include the design of the combustor as well as the "steam turbine" which has many of the features of a gas turbine. An organization with significant involvement in the development of such a system in the U.S. is Clean Energy Systems, Inc.

TASK 2 - ROLLS-ROYCE TURBOGENERATOR DEVELOPMENT

Background

SOFC systems can achieve ultra high efficiencies through integration with gas turbine technologies; the adaptation of gas turbine components to a high temperature fuel cell, in turn, requires special, unique performance characteristics and operating conditions not normally imposed on a conventional gas turbine. These include, for example, relatively high pressure losses between the compressor and turbine. As a key to improving the system integration and thus system efficiency, the subsystems must be developed from the ground up as an entire system taking into consideration these unique requirements.

The turbogenerator provides a pressurized air source to the hybrid fuel cell cycle. Additional net power from the turbomachine when coupled to a shaft-speed motor/generator is a secondary benefit. This limited additional power partially offsets what would normally be a parasitic load of an external motor driven compressor or blower to supply the air to the fuel cells.

This additional benefit is a result of properly integrating the turbomachine into a hybrid cycle configuration. Further, the turbomachine functions as a thermal management device for the fuel cell.

Period of Performance

The overall, ongoing, internally funded RRFCS turbogenerator program has been in progress since late 2002, and is projected to deliver hardware into limited production in early 2008.

This specific subcontract's period of performance covered by this report has been from October 18, 2005 to June 30, 2006.

Project summary

Development work with initial laboratory turbogenerator (S/N 30001)

The initial development consisted of the design of the turbogenerator to meet the requirements of the fuel cell / turbine hybrid system. Numerical modeling was utilized to develop the compressor and turbine maps that fit the needs of the hybrid cycle.

Hardware was designed to provide the performance requirements of the compressor and turbine maps. This included sizing geometries of the flow paths to meet proper compression and expansion ratios for a given mass flow and design speed. Support systems have also been developed to maintain turbomachine performance, such as, the lube oil system needed to provide proper lubrication and cooling of the bearing systems. Also, internally generated high pressure air is provided through secondary flow paths in the design of the hardware to create a seal between the process air of the gas turbine and the lube oil in the engine block.

The engine components were fabricated and assembled. Initial testing of turbomachinery verified predicted performance. A motor/generator was then integrated with the turbomachinery for speed control, and in turn mass flow control.

Details of the engine configuration as tested in the laboratory are included in Appendix F to this report.

Generator and Power Electronics Development

The generator and power electronics were developed and provided by an outside supplier. This generator is a high-speed solid magnet core generator/motor. In combination the generator/motor and power electronics provide seamless control of shaft speed of the gas turbine. They are capable of seamlessly controlling shaft speed through transitions from generating to motoring mode, and vice versa.

Test stand

The test stand provides the essential safety, fuel, control, and ventilation systems for the turbogenerator testing. All of the instrumentation is linked to a control room adjacent to the test cell providing a controlled environment while allowing the test engineer to monitor the test through instrumentation and visual inspection.

The safety system includes a fire suppression system with fire damper baffled inlets. There is also a fuel shut off valve for the fire safety system.

Deliverable turbogenerator S/N 30002

Based on the results of the initial development effort with engine 1, engine 2 was assembled, and is currently being tested. By the end of 2006 this second engine will be integrated into the hybrid system configuration for testing with the fuel cell flow path. Those tests will provide valuable information for evaluating and predicting the dynamics of the turbogenerator when coupled with a large volume (fuel cell pressure vessel) in between the compressor and turbine. Engine S/N 30002 will be used for this testing and is shown in its present configuration in Appendix F.

Test Data

A considerable amount of test data has been generated in the development process. This data was used in the optimization process to develop a functional and durable system. Development data documentation included:

- Aero and thermodynamic performance parameters
- Mechanical and structural integrity verification
- System start up and shut down characteristics
- Shaft dynamics and vibration characteristics
- Stage-to-stage flow matching
- Heat rejection characteristics
- Lubrication and scavenge system performance
- Control system performance and optimization
- Transient performance
- Thermal insulation requirements
- Effect of ambient temperature and pressure on performance.

Control system evolution

In the context of the overall fuel cell system, control of the fuel input provides for the primary regulation of the ultimate electrical output. However, in addition to the control of the fuel input, the turbogenerator acts as a thermal control device for the SOFC. It provides high temperature and high-pressure air mass flow control to the SOFC. To achieve thermal balance and temperature control of the SOFC, the compressor mass flow is manipulated via LP shaft speed control.

The power electronics for the motor/generator in turn controls the shaft speed of the turbogenerator via manipulating the applied load. Therefore, the LP shaft speed is the process variable and the generator/motor load is a control variable with respect to the turbomachine, the motor/generator and the power electronics subsystem. With regard to the SOFC, the air inlet temperature is the process variable and the shaft speed is the control variable. This creates a cascade control with the turbogenerator speed control as the inner loop with the SOFC temperature control as the outer loop.

System definition and initial implementation of the proposed control system was initiated during this time period. The turbogenerator will be tested in a fully integrated mode, coupled to the fuel cell system, later this year.

Compressor maps

The majority of the thermodynamic development of the turbomachinery was centered on defining compressor performance. This included stage matching, surge line definition, and operating speed line definition relative to the flows and pressures required by the fuel cell.

Sample compressor maps showing test results to date for both the LP and HP stages are presented Figures 3-6 and 3-7.

Sample data

Table 3-2 shows a sample of performance parameters measured at a part load point. This type of data has been generated throughout the entire operating range and is then used for verifying predicted performance models being conducted by RRFCS.

Table 3 - 1: Typical Clean Syngas Compositions (Dry and Sulfur Free Basis)

Component	Non-decarbonized	Decarbonized
CO	50.1	2.8
H_2	37.4	94.1
CO_2	10.2	0.6
CH_4	0.1	0.1
Ar + N_2	2.2	2.4
Total	100	100

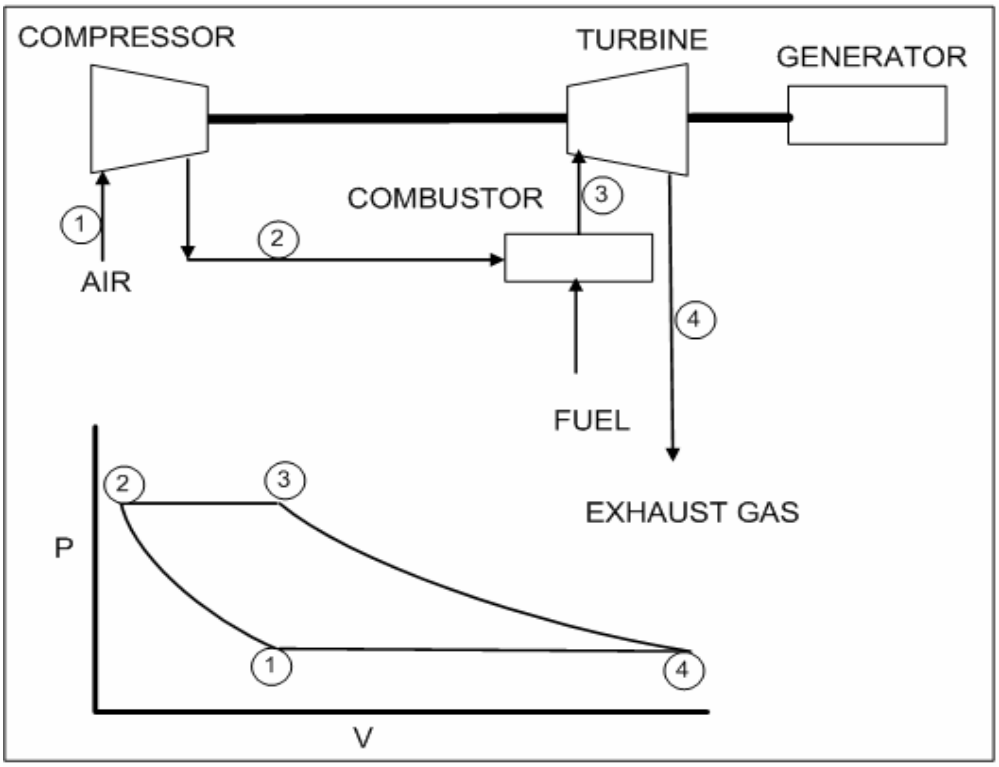

Figure 3 - 1: Gas Turbine and the Ideal Brayton Cycle P-V Diagram

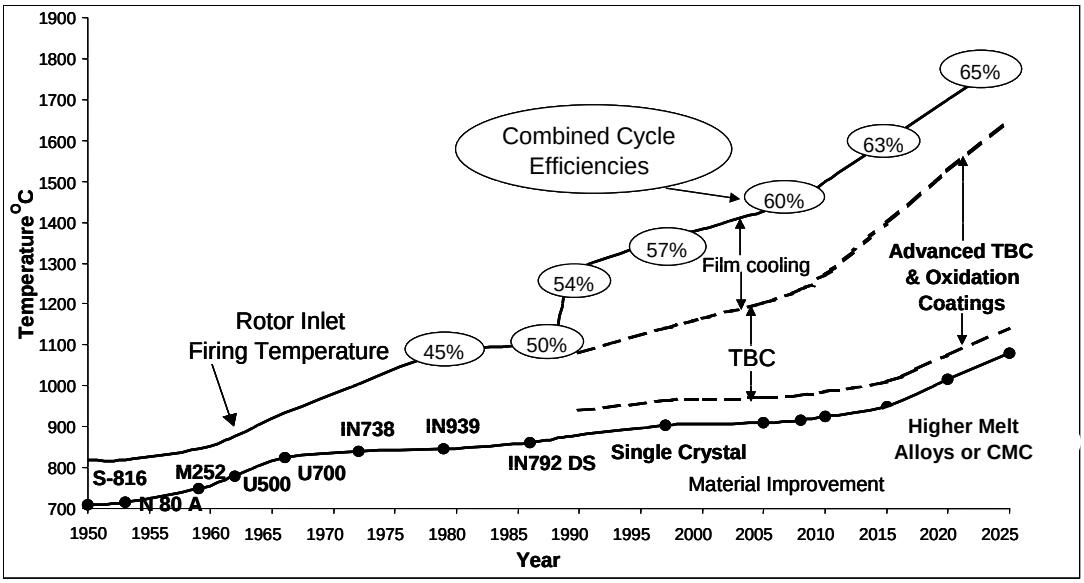

Figure 3 - 2: Impact of Firing / Metal Temperature on Efficiency

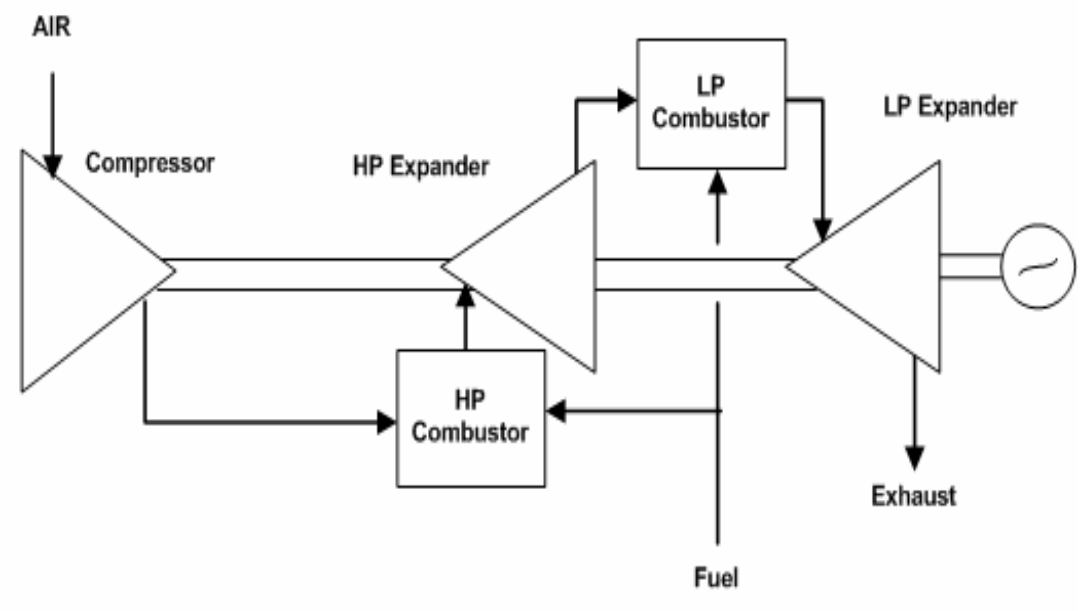

Figure 3 - 3: Reheat Gas Turbine Cycle

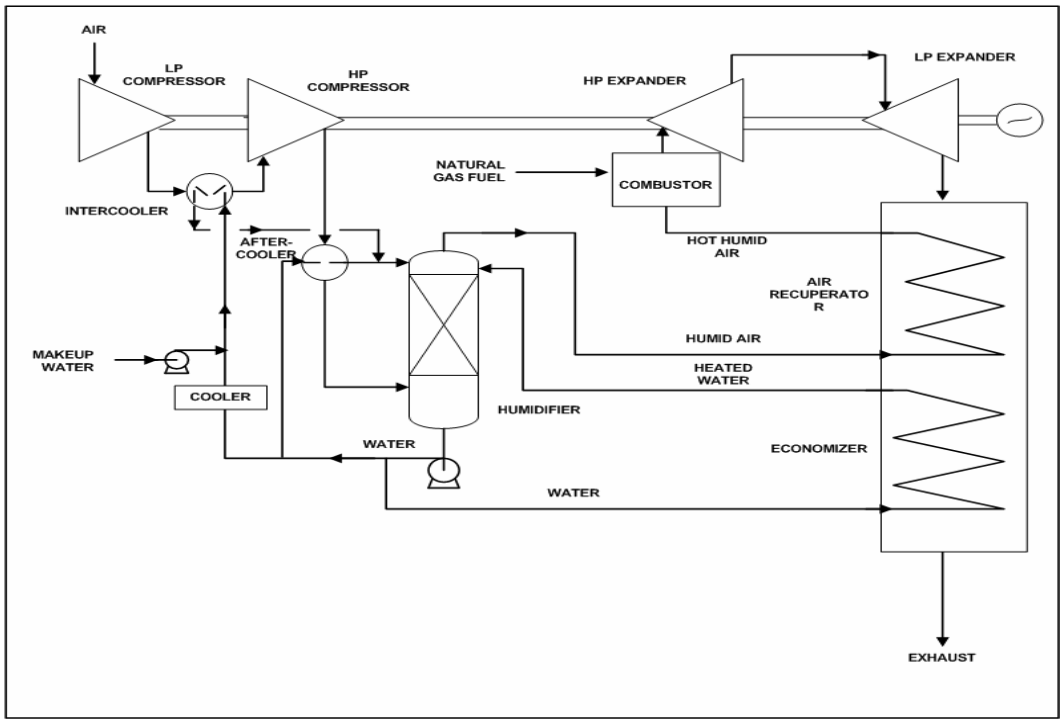

Figure 3 - 4: HAT Cycle

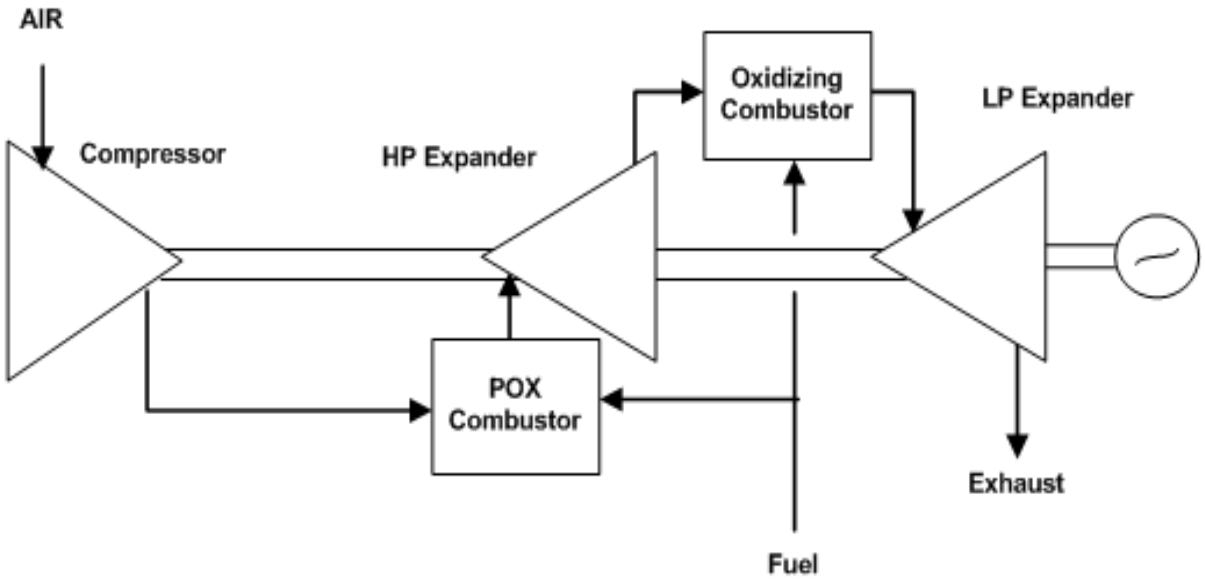

Figure 3 - 5: Partial Oxidation Cycle

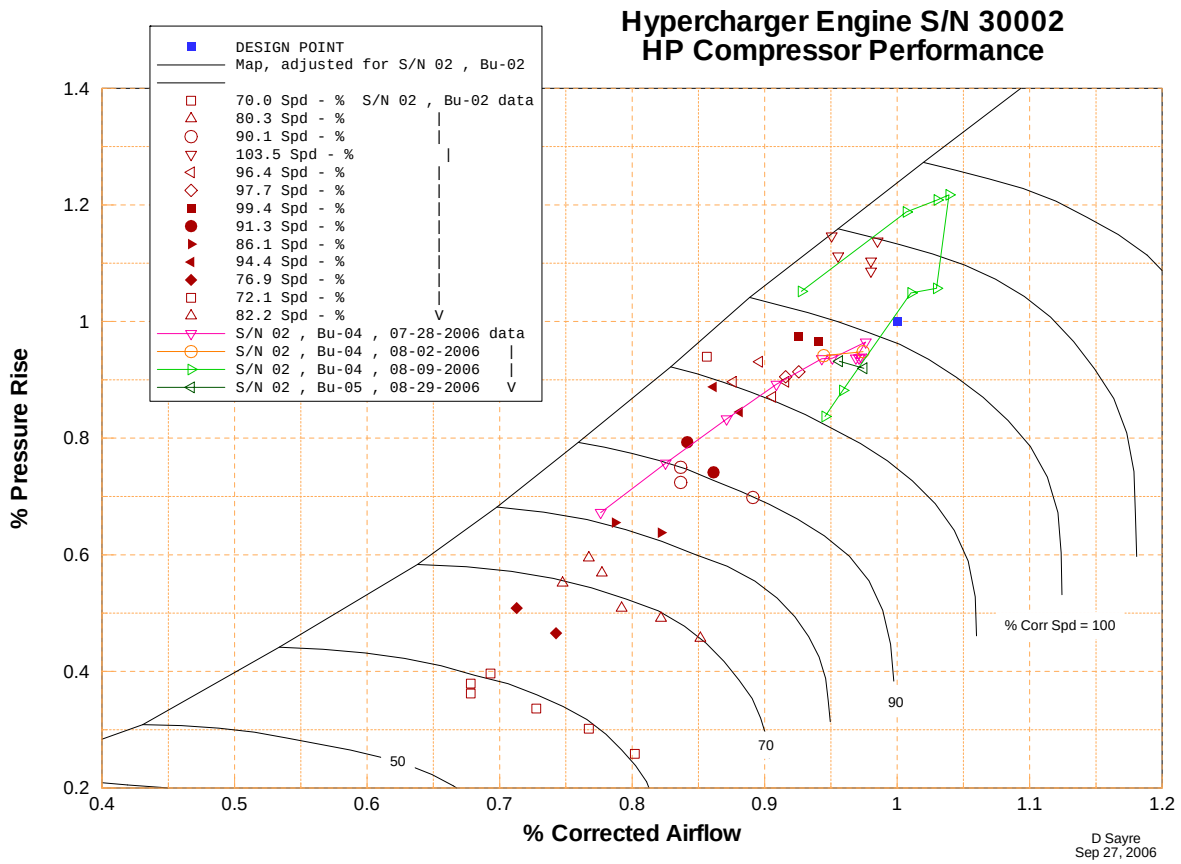

Figure 3 - 6: HP Compressor Map – Nondimensionalized

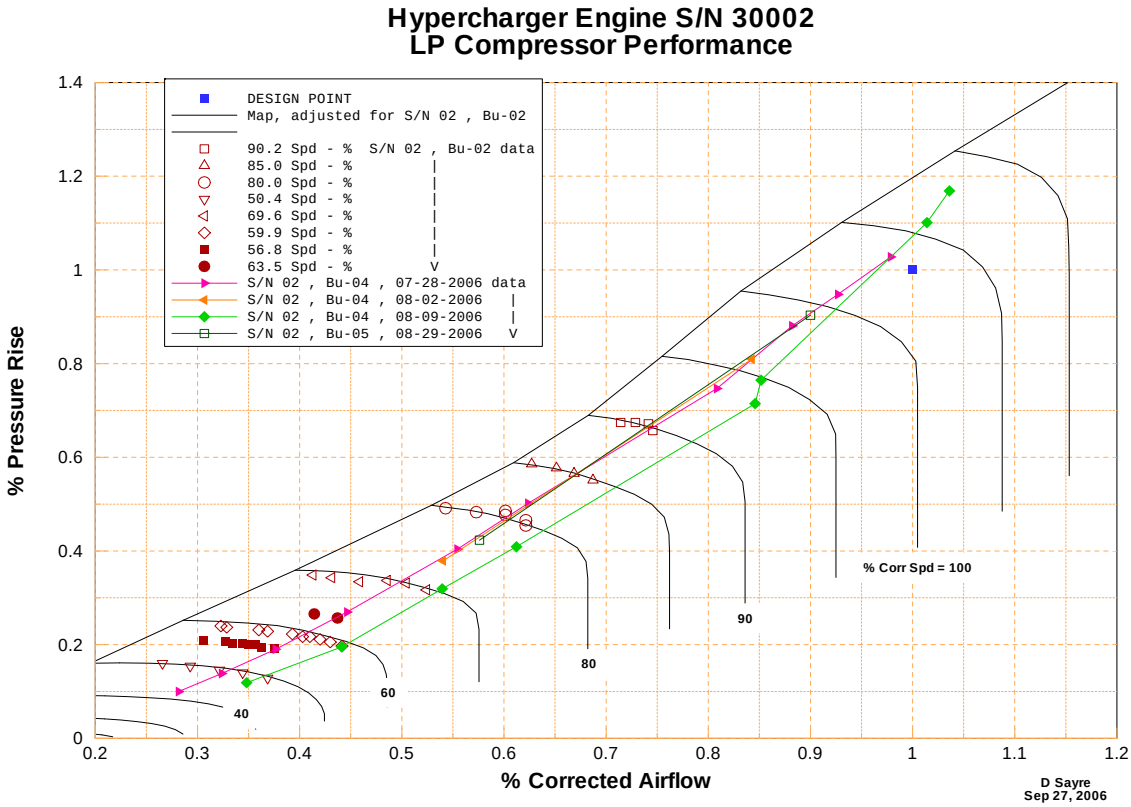

Figure 3 - 7: LP Compressor Map – Nondimensionalized

Table 3 - 2: Performance parameters recorded per data point

INFORMATION	
ENGINE MODEL	**TG1225P**
ENGINE S/N	**30001**
BUILD	**020**
DATE TESTED	**04-25-2005**
TIME	**9:05:25**
RECORD NUMBER	**3116**
TEST CELL	**19**
FUEL TYPE	**DF-2**
Run Timer (min)	**51.83**
Time at Set Point (approx) - minutes	**8.7**

HP SPOOL RPM observed - %	**90.5**
HP COMPRESSOR BLEED - %	**0.0**
Build Summary:	
S/N 003 Build 002 Generator Installed	
LP Spool Longer Oil Jets & Housing T/Cs	
HP Spool w/new Seals and Housing T/Cs	
New HP Turbine Scroll Bellows	
1.0" dia. Pressure Drop Orifice	

TEST DATA	
LP SPOOL SPEED (N1) - RPM	63,660
LP SPOOL SPEED (N1) - %	83.3
HP SPOOL SPEED (N2) - RPM	104,073
HP SPOOL SPEED (N2) - %	90.5
LP SPOOL OIL PRESSURE - PSIG	34
HP SPOOL OIL PRESSURE - PSIG	32
ENGINE OIL TEMPERATURE IN - deg F	147
LP SPOOL OIL RETURN TEMP - deg F	197
HP SPOOL OIL RETURN TEMP - deg F	193
VIB1 LP SPOOL - IPS	0.14
VIB2 HP SPOOL - IPS	0.23
LP COMPRESSOR	
LPC INLET AIR FLOW (Air Bell) - LB/SEC	0.41
LP CIT - deg F	63
LP CDT - deg F	
LPC dT/T	
LPC EFFICIENCY - %	
LP CIP (total) - PSIA	14.1
LP CDP (static) - PSIA	39.7
LPC PR	2.81
HP COMPRESSOR	
HPC INLET AIR FLOW - LB/SEC	0.41
HP CIT - deg F	319
HP CDT - deg f	531
HPC dT/T	
HPC EFFICIENCY - %	84.1
HP CIP (total) - PSIA	39.9
HP CDP (static) - PSIA	80.9
HPC PR	2.02
HPC BLEED - %	0.0
LP TURBINE	
LPT INLET AIR FLOW - LB/SEC	0.41
LP RIT - deg F	
LP RDT - deg F	
LP RIP (total) - PSIA	34.4
LP RDP (total) - PSIA	14.3
LPT delta H / THETAcr	
LPT EFFICIENCY - %	
LPT RE (t-t)	
HP TURBINE	
HPT INLET AIR FLOW - LB/SEC	0.41
HP RIT - deg F	1,360
HP RDT - deg F	
HP RIP (total) - PSIA	63.5
HP RDP (total) - PSIA	34.4
HPT delta H / THETAcr	
HPT EFFICIENCY - %	
HPT RE (t-t)	
COMBUSTOR	
FUEL / AIR RATIO	0.013
COMBUSTOR INLET TEMP - deg F	
FUEL TEMPERATURE - deg F	
FUEL HEATING VALUE - BTU/LBM	
FUEL FLOW - LBM/HR	18.4

CORRECTED DATA	
LP COMPRESSOR	
LP COMPRESSOR SPEED - RPM	63,415
LP COMPRESSOR SPEED (% cor) - %	83.0
LP COMPRESSOR AIR FLOW - LB/SEC	0.432
LP COMPRESSOR PRESSURE RATIO	2.81
HP COMPRESSOR	
HP COMPRESSOR SPEED - RPM	84,941
HP COMPRESSOR SPEED (% cor) - %	96.5
HP COMPRESSOR AIR FLOW - LB/SEC	0.185
HP COMPRESSOR PRESSURE RATIO	2.02
LP TURBINE	
LP TURBINE SPEED (cor) - RPM	51,925
LP TURBINE SPEED - %	83.3
LP TURBINE AIR FLOW - LB/SEC	0.215
LP TURBINE EXPANSION RATIO	2.41
HP TURBINE	
HP TURBINE SPEED - RPM	56,158
HP TURBINE SPEED - %	90.5
HP TURBINE AIR FLOW - LB/SEC	0.182
HP TURBINE EXPANSION RATIO	1.84

HP Compressor Bleed	
Bleed Active	No
Valve Position	Closed

HYPERCHARGER PERFORMANCE	
HYPERCHARGER PRESSURE RATIO	5.7
AIR DELIVERY PRESSURE - PSIA	80.9
AIR DELIVERY TEMPERATURE - deg F	531
RETURN AIR PRESSURE - PSIA	63.5
RETURN AIR TEMPERATURE - deg F	1360

GENERATOR PERFORMANCE	
POWER ELECTRONICS ACTIVE CONTROL	NO
OUTPUT POWER - Kw	0.0
OUTPUT VOLTAGE - Vac rms	-

TEST CELL DATA	
RELATIVE HUMIDITY (%)	59.2
PBAR (PSIA)	14.2
FC SIMULATOR PLUG - Cells/Square Inch	1400
PLUG PRESSURE DROP - PSI	13.4
FC PRESSURE DROP - PSI	17.3

CONCLUSIONS

PHASE 1

Several gas and coal based hybrid configurations are identified as having performance that meet the DOE goal for Vision 21 systems.

The gas turbine technology needs for hybrid system use differ significantly from those for non-hybrid use. Programs such as the DOE Advanced Turbine Systems (ATS) have resulted in the development of sophisticated high-temperature (1425 °C+) turbines aimed specifically at combined cycle application on both natural gas and syngas. These systems have projected efficiencies of 60%+ (LHV) with natural gas fuel and overnight installed costs estimated to be under US $500/kW. For hybrid use, the emphasis will be on increasing gas turbine power density, through intercooling and/or moisture addition, and through reduction of turbine cooling requirements where turbine cooling is required (the firing temperature of the gas turbine in hybrid applications being modest, in the range of 800 to 1200C). The reason for these developments is not so much for performance gain, but for cost reduction.

Other development needs include, as a minimum, large (~100 MW) recuperative type of gas turbines, i.e., with the capability of taking the air out from the compressor so that it may be supplied ultimately to an off-board pressurized fuel cell, and combustors accepting hot/depleted fuel and hot/vitiated air.

Fuel cell costs for large-scale applications (i.e., for central station applications) are ill defined. At this point, current technology fuel cells, which have been offered commercially for over a decade, have costs that are excessively higher than those of large-scale gas turbine based combined cycles. While it is projected that these costs will be reduced through manufacturing advances and large-scale production, fuel cell costs may not come down to the same level of large-scale combined cycle costs. Increasing gas turbine participation can reduce hybrid system costs, however. For natural gas-fueled hybrids, the fuel cell power to gas turbine power ratio ranges from 2 to 3; this ratio being lower for gas turbine cycles with intercooling (HAT had the lowest ratio).

The following summarizes the major findings up to date:

- Technology Selection. Fuel cell based hybrids are required to achieve the Vision 21 efficiency goals for both natural gas and coal based power plants. In the case of coal, gasification is required in order to use the hybrid technology for the power island.

- Required Plant Configurations. The following plant configurations have the potential to meet the Vision 21 efficiency goals:
  - Natural gas based hybrid configurations consisting of a pressurized SOFC integrated with an intercooled gas turbine or HAT can result in net plant efficiency of 75% (LHV). The operating pressure of the SOFC in the case of the HAT based hybrid is however, much

lower than that in the case of the intercooled gas turbine SOFC hybrid (without recuperation nor humidification).

- It is difficult to meet the Vision 21 efficiency goals with conventional high temperature gasification even with incorporation of high temperature gas cleanup and the hybrid technology in the power island (when moderate cell voltages are utilized). Gasifier with lower operating temperature (i.e., temperature of raw gas leaving the gasifier) and a non-water slurry based feed system is required such as the ATR or a two-stage gasifier (E-Gas type gasifier but with dry feed) to meet the Vision 21 thermal efficiency goal, as long as high carbon conversion may be maintained.

- Coal based ATR - SOFC Hybrid. The overall thermal efficiency is determined to decrease only slightly when the fuel cell operating pressure is reduced by more than a third while incorporating the Reactor / Expander topping cycle within the plant design. The net efficiency is reduced to 58.9% (HHV) from 60% (HHV) when the syngas inlet pressure to the fuel cell module is reduced to 1,200 kPa from 1,880 kPa. Reducing the fuel utilization from the design value of 85% to 80% also has a small effect on the thermal efficiency of the plant, reduces to 59.4%.

- Coal based CO_2 Capture. Using a combustor exit temperature of 1705C (3100F) (identified in the DOE-sponsored Advanced Turbine System Program), the estimated efficiency for the Near Zero Emission Plant with Nearer Term Technology is about 33% (HHV) with the captured CO_2 stream being pressurized to 13,800 kPa for sequestration. Incorporation of the Vision 21 technologies such as the SOFC, the ionic membrane air separation and high temperature membrane for H_2 separation into such a plant increases the plant net efficiency to a much higher value of 50% (HHV) while capturing 95% of the CO_2 evolved (the degree of carbon capture is dependent on the carbon conversion within the gasifier); the gas turbine firing temperature for this hybrid remains at a modest value.

- Advanced Near Zero Emission / H_2 Coproduction. The Vision 21 technologies such as the SOFC, the ionic membrane air separation and high temperature membrane for H_2 separation can be synergistically included into a coal based coproduction facility exporting H_2 while capturing 95% of the CO_2 evolved (the degree of carbon capture is dependent on the carbon conversion within the gasifier). A plant consuming 2241 MT / D of the bituminous coal produces 155 MW of electric power while exporting 1.86 x 10^6 nM^3 / D of H_2 (which corresponds to 39% of the energy content of the coal on an HHV basis) at a pressure of 2,810 kPa and pressurizing the captured CO_2 stream to 13,800 kPa for sequestration. The overall thermal efficacy of this coproduction facility is 61% utilizing the following expression:

  efficacy = (net export electric power + HHV contained in exported H_2) / (HHV contained in the total coal feed).

  Under an alternate operating scenario where the net power generated by the plant is increased by as much as 61% (increased from the 155 MW to 250 MW) while exporting about 50% less H_2 shows that the gas turbine produces about 10% less power and the steam turbine generates 12% more power while it is the SOFC that produces most of the additional power. This tends to maintain a high electrical efficiency for the plant at the two operating scenarios

since the turndown or part-load characteristics of the SOFC are excellent from a thermal efficiency standpoint. The corresponding overall thermal efficacy for this alternate low H2 export or high power export scenario is 55%.

These two operating cases show an estimate of the upper and lower bounds for the relative amounts of H_2 and power that may be produced by a given pant while maximizing the overall plant thermal performance for the set of design constraints chosen for the study and for the set of technologies employed in the configuration as developed for this case. One of these design constraints is that the air flow to the gas turbine can be reduced by a maximum of 20% (air flow to the gas turbine is reduced from 173 kg/s to 216 kg/s going for the high H_2 export case to the low H_2 export case) while a minimum of 100% excess air is utilized in the SOFC (183% excess air is utilized in the SOFC for the high H_2 export case versus 100% excess air for the low H_2 export case while providing the entire amount of the cathode exhaust gas as feed gas to the ITM / OTM unit).

- Gas Turbine Development Needs. The development needs for the gas turbine in these hybrid applications based on the currently available information from this study have identified large (~100 MW) gas turbines with the following attributes (see also Appendix E):
  - Recuperation
  - Low firing temperature
  - Intercooling (a desirable feature for high specific power and enhancing cycle thermal efficiency for the natural gas SOFC/HAT hybrid and potentially for coal based plants)
  - Combustors accepting hot and depleted fuel and air when gas turbine combustors are used for oxidation of the anode exhaust gas
  - Oil free bearings.

- Fuel Cell Development Needs. The development needs for the fuel cell systems have been identified:
  - SOFCs with high operating pressures (in the region of 1,800 to 2,000 kPa) in order to increase the thermal performance as well as increase the current density in the fuel cell while decreasing the size of equipment including that of the heat exchangers and the ITM / OTM.
  - For the natural gas application where the SOFC is integrated with the HAT cycle, cathode materials that can withstand a gas stream containing large concentration of water vapor are required.
  - Higher current density materials without extensive use of exotic/expensive materials in order to limit the physical size of the fuel cell stack modules and also minimize the high temperature piping and manifolding, and thus reduce the overall cost of the system. The ROM installed cost of the SOFC system in a coal based plant is $400/kW (with all contingencies and engineering fee included) which results in an overall cost of electricity of 39 Mills/kWh (10th year levelized cost) that is identical to that of the Base Case plant which utilizes the advanced gas turbine combine cycle without the SOFC (i.e., consisting of an IGCC). It should be noted that the Base Case plant utilized the partially steam cooled G technology gas turbine while higher plant efficiency and lower total plant cost may be expected with the H technology gas turbine for the IGCC. In addition, as the firing temperature is further increased, even greater improvements in the plant economics

may be expected for the IGCC option. Thus, as further advances in gas turbine technology are made with respect to firing temperature due to improvements in materials and cooling technology, the required SOFC system cost will have to be < $400/kW to be competitive on a cost of electricity basis with the IGCC. Note that no economic credit has been given to the SOFC based plant for its lower CO_2 emission on a kW basis resulting from its lower heat rate.

- Separate anode and cathode exhausts from the SOFC for zero emission plants (plants with CO_2 capture).
- Fuel cells operating with low air to fuel ratio in order to achieve the Vision 21 efficiency goals when the gas turbine development needs are limited to non-reheat systems. Management of heat generated within the cells becomes more challenging and internal reforming will help.

- Balance of Plant System Development Needs. The development needs for the balance of plant systems have also been identified:
  - Large scale inverters to support the fuel cells for central station applications are required.
  - Warm (300C – 400C) gas cleanup in order to make the syngas suitable for an SOFC with special emphasis on the following species: particulates, alkalis, chlorides, SiO_2, NH_3 and HCN (to avoid any potential for NOx generation). From an environmental emissions standpoint, Hg, Ar, Se and Cd capture should also be emphasized.
  - High temperature shift / membrane separation of H_2 in the case of high efficiency H_2 coproduction and / or zero emission plants.
  - Other technology development requirements consist of ionic membrane separation of air, lower temperature gasifiers such as the ATR while maintaining high carbon conversion ($\geq$ 95% for bituminous coals).

PHASE 2

The following summarizes the major findings up to date:

- Task 1 - Efficient Recovery of CO_2 - Current State-of-the-Art Technology Plant.

  - Among the current-state-of-the-art acid gas removal technologies, the Selexol™ process and the Cryogenic CO_2LDSep^{SM} Process show significant advantages over the remaining technologies. An amine based process by itself even with additives to improve selectivity between H_2S and CO_2 does not produce an acid gas suitable for even a Selectox sulfur recovery unit, as a minimum of 5 percent H_2S concentration is required in its feed gas for stable operation. Thus, an acid enrichment unit is required and in addition to this enrichment unit, another amine unit to remove additional CO_2 that slips through the primary amine unit is required. The equivalent power consumption (net electric power + thermal energy of low pressure steam converted to electric power using an appropriate conversion efficiency) of the amine-based unit is found to be significantly higher than the Selexol-based unit. With respect to the Benfield process, it is found that it is unable to meet the sulfur specifications in the product gases, and cannot demonstrate and selectivity between H_2S and CO_2, which is critical to this application. The modest

incremental back pressuring of the Regenerator doe not overcome its serious deficiencies for this application.

- Inclusion of a cold gas expander within the Selexol design to expand the high pressure treated syngas as it leaves the absorber column (i.e., without preheating it) to a pressure required by the GE 7FB gas turbine while generating electric power and refrigeration for chilling the solvent (by heat exchange with the exhaust from the expander) is advantageous to the overall IGCC performance and cost. The overall IGCC performance estimates are compared for a plant utilizing this cold gas expander with a plant utilizing a hot gas expander wherein the high pressure treated syngas is heated up to 550F against boiler feed water from the HRSG: with the hot gas expander design, the expander power increases but when the increase in the refrigeration load and the reduction in the steam turbine output (due to diverting heat away from the steam cycle to preheat the syngas) are taken into account, the cold gas expander case actually produces approximately 2 MW extra power on a net basis for a two train (GE 7FB) gas turbine based IGCC. Cost savings are also realized primarily due to the smaller size of the refrigeration and the expander units.

- Both the Selexol® and the CO_2LDSep^{SM} based Near Zero Emission / H_2 Coproduction plants which consume the same amount of coal (5,660 tonne/d or 6,240 ST/D on an "as received" basis) export 1.42 x 10^6 nM^3/d (53.1 MM SCFD) of H_2 (which is equivalent to about 12 % of the coal bound energy on an HHV basis). The Selexol® based FutureGen plant produces 488 MW of net electric power while the CO_2LDSep^{SM} based FutureGen plant produces 497 MW of net electric power which is about 2% higher than the Selexol® case. The effective overall plant thermal efficacy for the four column Selexol® based case is 39.3% while that of the CO_2LDSep^{SM} based case is slightly higher at 39.8%. On the other hand, the rough order of magnitude installed plant cost estimate for the Selexol® based case is $947 million (US) while that for the CO_2LDSep^{SM} based case is $994 million (US) which is about 5% higher than the Selexol® case.

- Since the cost and performance of the two plants are quite similar, the choice of the technology in such applications should be based on the ultimate product mix and degree of CO_2 capture required. The CO_2LDSep^{SM} process would be especially useful in cases where a very large fraction of the coal bound energy as export H_2 is required since it produces a large high purity H_2 stream, equivalent to as much as 87% of the coal bound energy (on a HHV basis) which is much higher than the 12% export amount used in this study. In the case of Selexol® process where the export H_2 stream is produced in a PSA unit, both the capital cost as well as the parasitic power consumption associated with the PSA tail gas compression increase as the amount of export H_2 is increased. On the other hand, with the Selexol® process the amount of CO_2 captured may be increased somewhat over the 91% overall carbon capture (for the case presented in this study) without increasing the plant design, costs and utility consumptions significantly while in the case of the CO_2LD Sep^{SM} process, the Overall Carbon Capture was limited to about 88%.

- Task 2 - Efficient Recovery of CO_2 – Intermediate Level Technology Plant.

  - The HSMR based Near Zero Emission / H_2 Coproduction plant also consumes 5,660 tonne/d or 6,240 ST/D of coal on an "as received" basis while exporting also 1.42 x 10^6 nM^3/d (53.1 MM SCFD) of H_2. The coal feed rate for this case was kept the same as the previous Selexol based case by adjusting the amount of air extracted from the gas turbine while constraining the net output of each of the gas turbines to 210 MW. By maintaining the same coal feed, it is expected that the effect of the uncertainties in the plant cost estimates of units that are common between the two cases is minimized and a more meaningful comparison of the relative economics of the two cases is derived. Performance and cost estimates were obtained from two different vendors for the PSA unit. The H_2 recovery was quoted at 70% by one vendor and 75% by the other while for the previous Selexol based case, both vendors quoted 85% H_2 recovery. Ranges are presented for the overall plant performance and cost estimates based on the 70% and the 75% H_2 recovery cases. The plant produces 533 to 535 MW of net electric power which is 9 to 10% higher than the Selexol® case for the same amount of coal gasified while capturing essentially all the carbon converted to a gas within the gasifier. The overall plant efficacy for the four column Selexol® based case was 39.3% while that for the HSMR based case is 41.8 to 42.0% (it should be noted that the efficacy difference between the two cases is dampened by the inclusion of the energy of the exported H_2). The degree of CO_2 capture for the Selexol® based cases was 91% while that for the HSMR based case is greater than 95%, limited by the minor amounts of other CO_2 and CO that would co-diffuse and any mechanical leakages in the HSMR. Co-diffusion of H_2O which has similar effective molecular diameter as H_2 should be minimized from an overall plant efficiency standpoint. Membrane consisting of two layers, one with larger pore size (where Knudsen diffusion controls) forming the layer adjacent to the reaction side should be beneficial. In this manner, the vast difference in molecular weights of H_2 and H_2O can be taken advantage of in assisting the separation through this Knudsen diffusion controlled layer.

  - The geometry of HSMR unit is assumed to be similar to that of a tubular reactor (tubes containing the shift catalyst) or a shell and tube heat exchanger with the feed syngas flowing inside the tubes constructed out of the microporous inorganic membrane material supported by a porous metal structure while the sweep gas along with the permeate flow on the shell side. The cost of this unit is developed by adding the fabrication and other material costs of \$1,500/m^2 [Paolo, Kreutz and Lozza, 2005] to the cost of the microporous inorganic membrane material (projectd at ~ \$1,000/m^2). A permeance of 1.1×10^{-6} kg $H_2/s/m^2/kPa$ [Longanbach et. al., 2002] is utilized in estimating the size of the HSMR.

  - The estimated total installed cost for the Selexol based plant is \$948 million and that for the HSMR based case is \$1,016 to 1026 million which is about 7 to 8% higher while the amount of power generated is 9 to 10% higher than that of the Selexol based case. An effective cost of electricity is calculated by adding to the net electrical energy generated by the plants, the electric equivalent of the energy contained in the exported H_2 utilizing

an efficiency of 60% on an LHV basis. The 10th year effective levelized cost of electricity (Appendix D summarizes the various assumptions made for this analysis) for the HSMR based case has a value of $48.03 to 48.53/MWh and is about 1 to 2% lower than that of the Selexol based case which is at $49.11/MWh. It should be noted that the advantage of the HSMR based case will be higher at higher coal prices since the HSMR based case is significantly more efficient for electric power generation.

- The major cost component in the case of the HSMR based plant is due to the radiant syngas coolers. A significant reduction in plant cost may be realized by eliminating these coolers, i.e., by utilizing the same quench design as employed in the Selexol case. Some efficiency will be sacrificed and the trade-off between loss of efficiency and savings in capital cost should be the subject of future study.

- Task 3 - Efficient Recovery of CO_2 – Advanced Technology Plant.

  - Comparing the performance of this Modified GRAZ Cycle based case with the HSMR based case developed under the previous Task 2 (both utilizing Warm Gas Cleanup / Separation), the two plants consume essentially the same amount of coal while exporting the same amount of H_2. The GRAZ Cycle based Near Zero Emission / H_2 Coproduction plant produces 520 MW of net electric power while the HSMR based Near Zero Emission / H_2 Coproduction plant produces 533 to 535 MW of net electric power which is about 3% higher than the GRAZ Cycle case. The overall plant efficacy for the GRAZ Cycle based case is 41.1% while that for the HSMR based case is 41.8 to 42.0% (it should be noted that the efficacy difference between the two cases is dampened by the inclusion of the energy of the exported H_2). The degree of CO_2 capture for both the GRAZ Cycle based case and the HSMR based case is greater than 95%.

  - The estimated total installed cost for the GRAZ Cycle based plant is $1,045 million while that for the HSMR based case is $1,016 to 1026 million which is about 2 to 3% lower while the amount of power generated is almost 3% higher than that of the GRAZ Cycle based case.

  - The technology used (firing temperature etc) for the high temperature turbine of the GARZ Cycle is kept the same as the gas turbine used in the HSMR case (i.e., the F technology) in order to quantify the differences in performance and cost of the two types of plants. The GRAZ Cycle, however is based on utilizing a large scale ITM unit (Advanced Technology plant) while the HSMR based plant (Intermediate Level Technology plant) uses a cryogenic ASU. Based on the results developed in this study for the two cases that use Warm Gas Cleanup / Separation, it appears that the GRAZ cycle even with the use of an ITM does not show any advantage over the HSMR based case in plants especially where H_2 export is required.

PHASE 3

- Task 1 – Advanced Turbine and Turbine Systems Assessment

  - Gas turbines could play a key role in the future power generation market including coal based Near Zero Emission / H_2 Coproduction plants. Potential exists to take the overall cycle efficiencies to 65% on natural gas on an LHV basis, 60% being the state-of-the-art combined cycle efficiency with the technological advances being made or being investigated which include higher rotor inlet temperature of 1700ºC (3100ºF) or higher and higher blade metal temperature ~1040ºC (1900ºF) made possible with the use of advanced materials including advanced thermal barrier coatings and turbine cooling techniques including closed loop steam cooling, advanced combustor liners to handle the higher temperatures within the combustor, pressure gain and cavity combustors, high pressure ratio compressors (greater than 30 to take full advantage of higher firing temperature) and integration capability with high temperature ion transport membrane air separation in IGCC applications. In tandem, changes to the basic cycle configuration such as the inclusion of reheat combustion and intercooling which is advantageous in very high pressure ratio cycles would be complementary in achieving the goals of higher thermal efficiency and higher engine specific power output.

  - These desirable attributes could also be further enhanced by the use of advanced combustor concepts such as the pressure gain combustor while the TVC holds the promise of an alternate option for suppressing the NOx emissions, especially in syngas applications. Due to the high H_2 content of the syngas stream, the use of current design pre-mixed gas turbine combustors to limit NOx formation is precluded. Diluent addition is required to the syngas in order to reduce the NOx generation when utilizing diffusion type combustors; the amount of diluent addition required by decarbonized syngas is much higher than that required for the un-decarbonized syngas.

  - In IGCC applications, the H_2O vapor content of the working fluid flowing through the turbine, especially in the case when decarbonized syngas is the fuel and while utilizing water vapor as the diluent, is significantly higher than that in the case when natural gas is the fuel. The implications for the gas turbine in such applications are that the turbine firing temperature is derated due the different aero-heat transfer characteristics and due to the higher cooling air temperatures caused by operation under a higher pressure ratio, while the life of the thermal barrier coatings and any ceramics that may be utilized in advanced gas turbines in the future may be adversely effected.

  - Penalty of utilizing a SCR in a decarbonized syngas fired combined cycle is quite small as compared to its use in an IGCC without upstream CO_2 capture.

- Task 2 – Rolls-Royce Turbogenerator Development

  – The RRFCS program is an ongoing long term effort to introduce the hybrid SOFC/turbogenerator system into commercial service in the 2010 time frame. The development of specifically tailored turbomachinery for such applications is well along the way to meet this schedule. Fabrication and testing of this equipment is on going in Rolls-Royce facilities in Indianapolis, and will be integrated with the fuel cell later this year. The experimental data is now available for validation of theoretical models of such hybrid systems.

REFERENCES

1. Agnew, G., et. al., "The Design and Integration of the Rolls-Royce Fuel Cell Systems 1 MW SOFC, "*Proceedings of the ASME Turbo Expo Conference*, Reno-Nevada, June 2005.
2. Appleby, A.J. and Foulkes, F.R., Fuel Cell Handbook, Krieger Publishing Company, Florida, p 602, 1993.
3. Armstrong, P.A., "Method for Predicting Performance of an Ion Transport Membrane Unit-Operation," Air Products and Chemicals, Inc., Advanced Gas Separation Technology, Allentown, Pennsylvania.
4. Bhargava, A., M. Colket, F. Robson, B. Knight, A. Jennings, and W. Sowa, Role of Humidity and Unmixedness on NO_x Generated in a Gas Turbine, Joint Meeting of The United States Sections," The Combustion Institute, GW University, Washington DC, March 15-17, 1999.
5. Bhargava, R. and C. B. Meher-Homji, "Parametric Analysis of Existing Gas Turbines with Inlet Evaporative and Overspray Fogging," *Proceedings of the ASME IGTI Turbo-Expo Conference*, Amsterdam, June 2002.
6. Bessette, N. F. and George, R.A., Performance and Reliability of Westinghouse's Air Electrode Supported Solid Oxide Fuel Cell at Atmospheric and Elevated Pressures, 1996.
7. Burrus, D. L., A. W. Johnson and W. M. Roquemore, and D. T. Shouse, "Performance Assessment of a Prototype Trapped Vortex Combustor for Gas Turbine Application," *Proceedings of the ASME IGTI Turbo-Expo Conference*, New Orleans, June 2001.
8. Butz, J. R., J. S. Lovell, T. E. Broderick, R. W. Sidwell, C. S. Turchi and A. K. Kuhn, "Evaluation of Amended Silicates™ Sorbents for Mercury Control," Proceedings of the Mega Symposium, Washington DC, May 2003.
9. DOE Report "Transport Gasifier IGCC Base Cases," PED-IGCC-98-006, June 2000.
10. EPRI Report No. IE-7365, "Engineering and Economic Evaluation of CO_2 Removal from Fossil-Fuel-Fired Power Plants," prepared by Fluor Daniel, Inc, June 1991.
11. Gemmen, R. S., G. A. Richards and M. C. Janus, "Development of a Pressure Gain Combustor for Improved Cycle Efficiency, "*Proceedings of the ASME Cogen Turbo Power Congress and Exposition*, 1994.
12. Ghezel-Ayagh, H., "Hybrid Controls," *Presented at the ICEPAG Conference*, Irvine, California, September 2004.
13. Heaven, D. and B. DeSouza, "Technical Issues with SCR in IGCC Applications," presented at the 6th European Gasification Conference, Brighton, UK, May 2004.
14. Hirschenhofer, J.H., et al., Fuel Cell Handbook (Revision 3), U.S. Department of Energy (DE94004072), January 1994.
15. Hirano, A. et al., Evaluation of a New Solid Oxide Fuel Cell System by Non-isothermal Modeling, *J. of The Electrochemical Society*, Vol. 139, No. 10, October 1992.
16. Hsu, K. Y., Gross, L. P. and Trump, D. D., "Performance of a Trapped Vortex Combustor," J. of Propulsion and Power, Paper No. 95-0810, AIAA 33rd Aerospace Sciences Meeting and Exhibit, Reno, Nevada, Jan 9-12, 1995.

17. Jericha H., Sanz W., Woisetschläger J., Fesharaki M., "CO2-Retention Capability of CH4/O2-Fired Graz Cycle", CIMAC Paper G07, CIMAC Conference Interlaken, Switzerland, 1995.
18. Korobitsyn, M.A., Kers, P.W., Hirs, G.G., "Analysis of a gas turbine cycle with partial oxidation," (ASME Paper 98-GT-33), Presented at the 43rd ASME International Gas Turbine & Aeroengine Congress, Stockholm, Sweden, June 2-5, 1998.
19. Leonard, R., Rogers, L., Vimalchand, P., Liu, G., Smith, P., Longanbach, J., Development Status of the Transport Gasifier at the PSDF, presented at the 2001 EPRI Gasification Technologies Conference, San Francisco, CA, October 7–10, 2001.
20. Litzinger, K., et. al., "Comparative Evaluation of SOFC Gas Turbine Hybrid System Options," *Proceedings of the ASME Turbo Expo Conference*, Reno-Nevada, June 2005
21. Longanbach , J. R., Rutkowski , M. D., Klett, M. G., White, J. S., Schoff, R. L. and Buchanan , T. L., "Hydrogen Production Facilities Plant Performance and Cost Comparisons,"Final Report prepeared for U.S. DOE /NETL March 2002.
22. Paolo, C., T. Kreutz and G. Lozza, "CO2 Sequestration from IGCC Power Plants by Means of Metallic Membranes," GT-2005-68023, Proceedings of the ASME IGTI Turbo Expo, Reno, June, 2005.
23. Newby et al, "An Evaluation of a Partial Oxidation Concept for Combustion Turbine Power Systems", (ASME Paper 97-AA-24), 1997.
24. Ono, T., "NPRC Negishi IGCC Startup and Operation," Presented at the Gasification Technologies Conference, San Francisco, California, October, 2003.
25. Rao, A.D., et al, Power Plant System Configurations for the 21st Century, GT-2002-30671, ASME IGTI Turbo Expo, Amsterdam, June, 2002.
26. Rao, A. D., "Process for Producing Power," U.S. Patent No. 4,289,763, May 16, 1989.
27. Rao, A. D. and G. S. Samuelsen, "Analysis Strategies for Tubular Solid Oxide Fuel Cell Based Hybrid Systems," *Journal of Engineering for Gas Turbines and Power*, **124**: 503-509, 2002.
28. Rao, A. D., V. J. Francuz, F. J. Mulato, B. Sng, E. W. West, J. Kana, G., Perkins and D. Podolski, "A Feasibility and Assessment Study for FT4000 Humid Air Turbine (HAT)," EPRI Report TR-102156, September 1993.
29. Rao, A.D. and D. Du Plessis, "Prospects for 200 MW Western Canadian Coal IGCC with CO_2 Capture," Proceedings of the Combustion Canada Conference, Vancouver, September 2003.
30. Richards, R. E., P. A. Armstrong, M. F. Carolan, V. E. Stein, R. A. Cutler, J. H. Gordon and D. M. Taylor, "Developments in ITM Oxygen Technology for Integration with Advanced Power Generation Systems," Proceedings of the 26th International Technical Conference on Coal Utilization and Fuel Processing, March, 2001
31. Roark, S.E., R. Machay, A. F. Sammells, "Hydrogen Separation Membranes for Vision 21 Energy Plants," Proceedings of the 28th International Technical Conference on Coal Utilization and Fuel Systems, Clearwater, Florida, March 10-14, 2003.

32. Robson, F.L., “Advanced Turbine Systems Study Scoping and Feasibility Study,” Final Report (Draft), United Technologies Research Center, April 1993.
33. Schonewald, R., “Turbo-Machinery Requirements for Practical SOFC-Gas Turbine Hybrid Systems,” *Proceedings of the ASME Turbo Expo Conference*, Reno-Nevada, June 2005.
34. Smith, J. R., T. Surles, B. Marais, H. Brandt and F. Viteri, "Power Production with Zero Atmospheric Emissions for the 21st Century", Presented to the 5th International Conference on Greenhouse Gas Control Technologies, Cairns, Queensland, Australia, August 13-16, 2000.
35. Swanson, M., D. Hajicek, “Lignite Testing in an Advanced High-Temperature, High-Pressure Transport Reactor Gasifier,” Final Report, 2002-ERC-08-01, August 2002.

APPENDIX A - ANALYSIS TOOLS

A special steady-state simulation tool – Advanced Power System Analysis Tool (APSAT), developed at the University of California, Irvine is applied along with State-of-the –Art-Performance Program (SOAPP), a proprietary simulation program first developed by the Pratt & Whitney Division of United Technologies for use in the analyses of the performance and design of aircraft gas turbine power systems.

APSAT

APSAT was specifically developed to handle complex configurations of advanced energy systems, especially those combining electrochemical and thermo-mechanical components in various thermodynamic cycles. More details about the analytical and computational strategies about APSAT have been described previously (Rao and Samuelsen, 2002). APSAT was validated by comparing the predicted performance for the Siemens-Westinghouse 220 kW Solid Oxide Fuel Cell / Gas Turbine (SOFC/GT) hybrid located at the National Fuel Cell Research Center to actual operating data collected. Figure A-1 depicts the 220 kW SOFC/GT hybrid. The comparison between the predictions made by APSAT with observed data are presented in Table A-1.

The following provides a brief overview of some of some of the modules that play a key role in the simulation of the hybrid cycles.

SOFC Model

The simulation approach used in APSAT is based upon the fundamental physical laws that govern the operation of fuel cells These processes include physical, chemical and electrochemical processes. For example, the physical processes include (but are not limited to): gaseous bulk flow of reactants and products to and from the outer surface of the electrodes, pore diffusion of the reactant within the cathode, heat transfer through and between gases and solids, transport of reactant through the electrode, and through electrolyte to the electrode surface (double layer), etc. The chemical processes include (but are not limited to): reformation and shift reaction equilibria , adsorption of electroactive species onto electrode, etc. The electrochemical processes include (but are not limited to): anodic electrochemical reaction of electrically charged species, cathodic electrochemical reaction of electrically charged species, etc.

A comparison of the SOFC performance as predicted by the APSAT model with that published by Westinghouse (now Siemens-Westinghouse) (Bessette and George, 1996) is presented in Figure A-2 which shows that the predicted results are in close agreement with the published values.

Gas Turbine

Two types of gas turbine models are included, one that may be configured by the user to include multiple compression stages with intercooling between the stages and multiple expansion stages with reheat (with combustors) between the stages, and the second consisting of a fixed geometry simple cycle (or conventional Brayton cycle) with no intercooling of the compressor or reheat during expansion.

In the user-defined gas turbine model, the efficiency of the compressor and expander and the air required for cooling the blades of the turbine as well as its purge air requirements are calculated by first calibrating a simple cycle engine based on data published by the gas turbine manufacturer, and then applying adjustments to the values determined for the "base-line engine." The program determines internally the necessary parameters for the base-line engine and for use with the user-defined model (as well as with the “fixed geometry” model).

The fixed geometry model assumes that the gas turbine has the same geometry as the gas turbine used for calibrating the engine. The firing temperature and pressure-ratio of the gas turbine are adjusted for variations in flow rate and composition of the working fluid. The firing temperature is adjusted in order to maintain the same metal temperature of the first-stage blades as that for the base-line engine since the turbine cooling flows are not controlled in an engine. A correlation derived from published performance data for the Nuovo Pignone gas turbine (Model PGT 5B/1) which has an output of 5.4 MW at ISO conditions is utilized to adjust the polytropic efficiency of the compressor for changes in the pressure-ratio. The small Nuovo Pignone gas turbine is utilized since it is in the size range being considered by industry for fuel cell based hybrid applications.

The performance curves generated by the model for a large industrial gas turbine (General Electric MS 7001EA model with output of 85 MW at ISO conditions) are presented along with data published by General Electric in Figure A-3. As can be seen, the agreement between the model predictions and published data are in excellent agreement despite the more than an order of magnitude scale-up in the size of the gas turbine.

A comparison of the combustor outlet temperature as developed by APSAT for a syngas fuel is compared to that calculated by ASPEN in Table A-2. As can be seen, the outlet temperatures are in close agreement validating the thermodynamic basis used.

Humidifier Model

The humidifier is modeled rigorously by accounting for the simultaneous heat and mass transfer rate-controlled processes occurring within this contact device rather than modeling it simplistically as a series of equilibrium stages.

Compressor and Steam Turbine Models

APSAT has the advantage of predicting the isentropic efficiency using relationships that take into account the capacity of the unit in the case of a compressor (Gas Research Institute Report, 1993), while in the case of steam turbines, correlations developed by Spencer et. al. (1974) may be utilized to predict the isentropic efficiency for each of the sections (high pressure, intermediate pressure and condensing). A comparison of the compressor outlet temperature as predicted by APSAT is compared to that calculated by ASPEN in Table A-2 while utilizing the isentropic efficiency as predicted by APSAT in ASPEN. As can be seen, the outlet temperatures are in close agreement validating the thermodynamic basis used.

SOAPP

Over the years, the capability of SOAPP has been extended by UTRC and kWS to ground-based power systems of all types including gas turbines, steam turbines, etc., and all the ancillary equipment and heat exchangers/boilers that make up modern power systems. In addition, both United Technologies and kraftWork Systems have developed models of the basic types of gasifier such as air- and oxygen-blown entrained-flow, fixed-bed, and fluid-bed. Modules representing both high- and low-temperature cleanup systems have also been developed. SOAPP consists of modules representing components (compressors, turbines, pumps, etc.) which are assembled into a “design” by a powerful preprocessor containing the necessary data bases and performance maps. The modules use physical and thermodynamic laws to describe the component and how it functions. Changes in characteristics for a particular module or for many modules can be specified and SOAPP will determine new performance parameters for the overall system. Conversely, target performance goals can be specified and the requirements for various components can be determined. Gas turbines can be modeled in detail using SOAPP.

REFERENCES

1. Bessette, N. F. and George, R.A., “Performance and Reliability of Westinghouse's Air Electrode Supported Solid Oxide Fuel Cell at Atmospheric and Elevated Pressures,” 1996.

2. Bessette II, N. F. and Wepfer, W. J. "Prediction of On-design and Off-design Performance for a Solid Oxide Fuel Cell Power Module," Energy Conversion and Management, 37(3): 281-293, 1996.

3. Ferguson, J.R., “Heat and Mass Transfer Aspects of SOFC Assemblies and Systems,” IEA Natural Gas Fueled Solid Oxide Fuel Cells and Systems, July 2-6, 1989.

4. Gas Research Institute Report, “Evaluation of Advanced Gas Turbine Cycles,” GRI-93/0250, August 1993.

5. Haynes, C. and Wepfer, W., "Design for Power of a Commercial Grade Tubular Solid Oxide Fuel Cell," Energy Conversion and Management, 41: 1123-1139, 2000.

6. Spencer, R.C. et al., "A Method for Predicting the Performance of Steam Turbine-Generators," General Electric Technical Bulletin GER –2007C, July 1974.

Table A - 1: Comparison of Simulation Results with Data

	Measured Values	Predicted Values
Gas Turbine		
Power output, kW	21	21.60
SOFC Stack		
Cell Voltage, Volts	0.639	0.633
Stack Voltage, Volts	244	243.1
Current, Amps	700	694.2
DC Power output, kW	170.8	168.78
Total System		
Adjusted AC power output, kW	183.45	181.94
System efficiency, %	52.44	51.92

Table A - 2: Comparison between APSAT and ASPEN

Syngas Combustor	**Air Compressor**
Inlet Air Conditions = 404 ºC, 15.85 atm Inlet Syngas Composition = 38.4% H2, 1.2% CO, 0.06% CH4, 1.63% CO2, 31.1% H2O, 26.76% N2, 0.81% Ar, 0.04% H2S Outlet Pressure = 15.29 atm Calculated Outlet Temperature: ASPEN = 1233 ºC APSAT = 1235 ºC	Inlet Conditions = 15 ºC, 1 atm Outlet Pressure = 15.85 atm Isentropic Efficiency = 85.7% Calculated Outlet Temperature: ASPEN = 404.4 ºC APSAT = 404.2 ºC

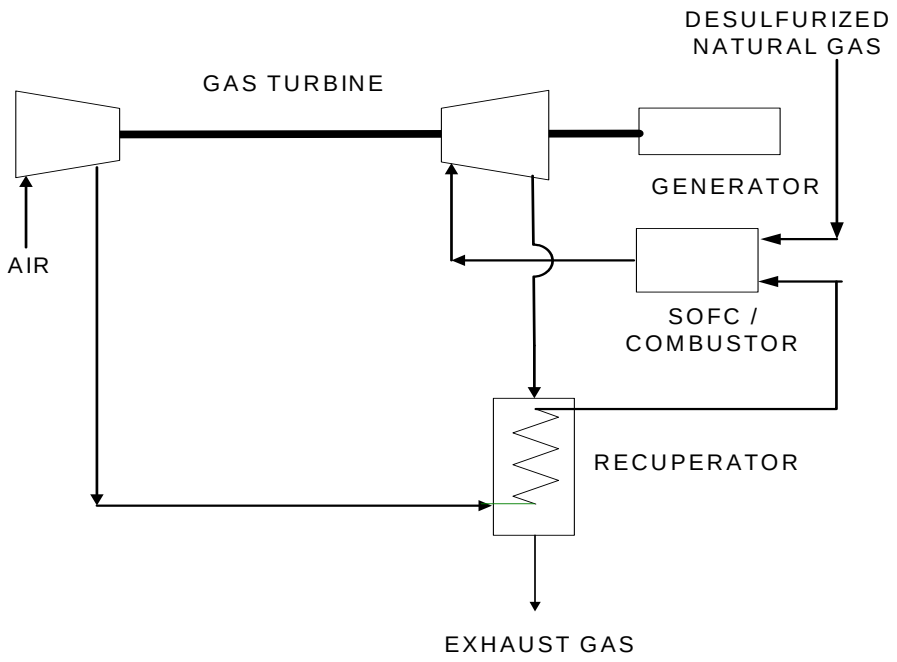

Figure A - 1: Schematic of SOFC/GT Hybrid

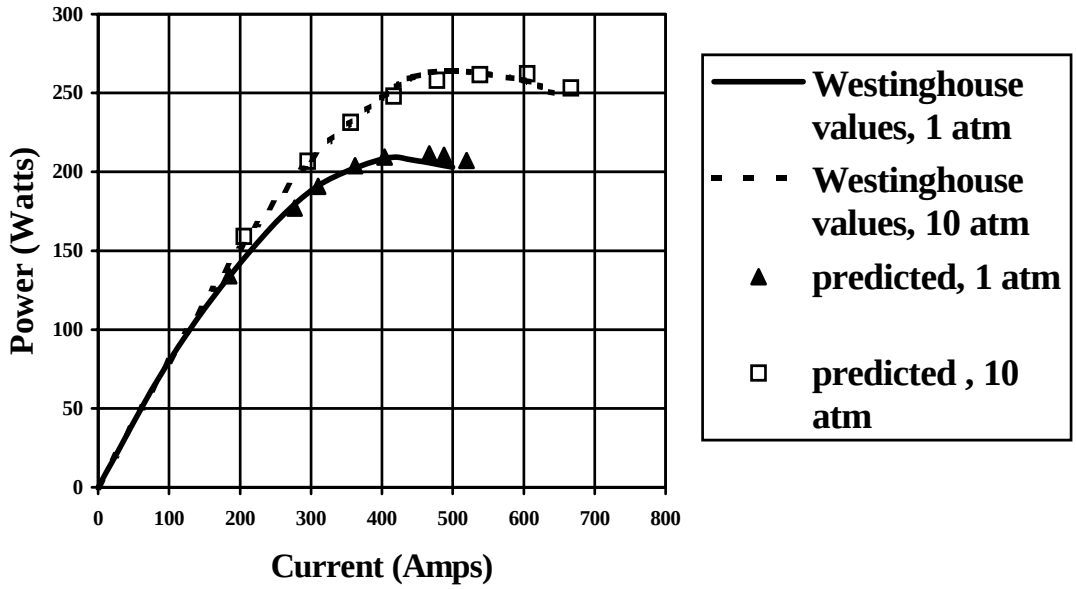

Figure A - 2: Comparison between Predicted and Westinghouse Values at 1 atm and at 10 atm with 2.23 cm outside diameter and 150 cm length cell

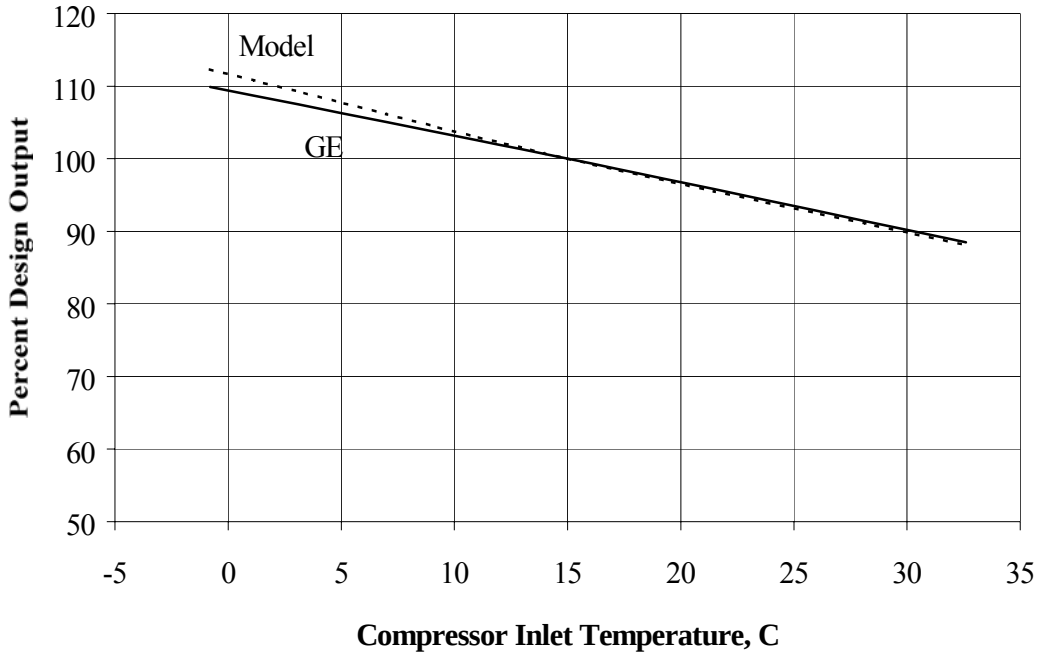

Figure A - 3: Variation of Power Output with Compressor Inlet Temperature

APPENDIX B – SCREENING ANALYSIS

NATURAL GAS BASED CASES

The initial screening analysis identified three categories of natural gas fueled hybrid cycles having the potential to reach the Vision 21 efficiency goal:

1. High pressure internally reforming solid oxide fuel cell (SOFC) integrated with a high-pressure ratio intercooled gas turbine
2. High pressure internally reforming solid oxide fuel cell (SOFC) integrated with the Humid Air Turbine (HAT) cycle
3. Atmospheric pressure internally reforming molten carbonate fuel cell (MCFC) integrated with a high-pressure ratio intercooled gas turbine.

Additionally for the gas-fired systems, two "zero emission" plants, i.e., plants recovering the CO_2 for sequestration were also considered:

1. O_2 breathing high-pressure SOFC integrated with HAT cycle and CO_2 recycle
2. Advanced Rankine cycle (using gas turbine technology) combusting H_2 with O_2 in rocket engine technology combustor.

The following provides the process descriptions while Table B-1 summarizes the thermal performances estimates for these five cases.

High Pressure SOFC Integrated with High Pressure Ratio Intercooled Gas Turbine

The system as depicted in Figure B-1 consists of an intercooled gas turbine integrated with a pressurized tubular SOFC. Atmospheric air is compressed in an intercooled compressor, comprised of a low pressure compressor (LPC) and a high pressure compressor (HPC). The discharge air from the high pressure (HP) compressor is supplied to the SOFC as its oxidant. The fuel utilization in the SOFC is set at 85%. Desulfurized fuel is humidified in a column where it is counter-currently contacted with hot water. A portion of the water is evaporated into the fuel stream, the heat required for the humidification operation being the heat recovered from the intercooler and the stack gas by circulating water leaving the humidifier. The humidified fuel is then preheated in the turbine exhaust and supplied to the SOFC. The exhaust from the cells, consisting of the depleted air and the depleted fuel is supplied to a combustor that may physically be part of the SOFC system or the gas turbine. The exhaust from the combustor enters the high pressure turbine (HPT) which drives the HP compressor and is expanded to a pressure which is higher than atmospheric. The exhaust from the HP turbine is supplied to the low pressure turbine (LPT) where it is expanded to near atmospheric pressure and

then supplied to the heat recovery unit. The LP turbine drives the low pressure (LP) compressor and the generator.

It was determined that in order to reach the efficiency goal of 75% (LHV), the SOFC had to operate with a fuel to air ratio approaching stoichiometric. If higher air to fuel ratio were used in the HP SOFC, then in order to meet the efficiency goal, an alternate approach consisting of installing a second SOFC between the HP and LP turbines would be required (a "reheat cycle"). This alternative configuration, however, did not significantly improve performance and would increase plant cost and complexity.

The optimum efficiency of the cycle occurred at a pressure ratio greater than 50, while the gas turbine firing temperature was modest, <1200C (2190F). As mentioned above, several configurations resulted in nearly equal performance, e.g., a non-intercooled gas turbine with a pressure ratio of 20 had an efficiency only 0.3 points lower, well within computational error. When efficiency was a toss up, the intercooled gas turbine was chosen because of its higher power density (kW/air flow), a factor that would mitigate the system costs. This is especially true with the hybrid since the optimum cycle efficiency occurs when the only heat to the gas turbine is from the SOFC – the hot exhaust further heated by catalytic combustion of the remaining hydrocarbons in the exhaust. Since these temperatures seldom exceeded 1150 - 1200C (2100 – 2190F), power (kW/air flow) is somewhat limited.

High Pressure SOFC Integrated with HAT

The system as depicted in Figure B-2 is similar to the previous case consisting of an intercooled gas turbine integrated with a pressurized tubular SOFC except that it incorporates humidification of the air and the humidified air is preheated in a recuperator in the turbine exhaust before it is fed to the SOFC. The fuel utilization in the SOFC is again limited to 85%. The air leaving the HP compressor is first cooled in an aftercooler and then introduced into the humidifier column where it comes into counter-current contact with hot water. A portion of the water is evaporated into the air stream, the heat required for the humidification operation being recovered from the intercooler and the stack gas by circulating water leaving the humidifier. The desulfurized fuel is also humidified in a similar manner.

It was determined also for this configuration that in order to reach the efficiency goal of 75% (LHV), the SOFC had to operate with a fuel to air ratio approaching stoichiometric while if higher air to fuel ratios are to be utilized in the SOFC, then in order to meet the efficiency goal, the alternate approach consisting of installing a second SOFC between the HP and LP turbines is required. This alternate cycle configuration as pointed out earlier would increase the plant cost and complexity and was discarded from further consideration.

The optimum efficiency of the cycle occurred at a pressure ratio of approximately 20, which is much lower than the previous case, while the gas turbine firing temperature remained at a modest value of <1200C (2190F).

Atmospheric Pressure MCFC Integrated with Intercooled Gas Turbine

A number of configurations of the atmospheric MCFC were considered including several in which the exhaust of the MCFC was cooled, compressed to gas turbine operating conditions, recuperated and further heated by combusting the remaining hydrocarbons. The configuration with the best performance, however, is that shown in Figure B-3. This system consists of an intercooled gas turbine integrated with an atmospheric pressure MCFC. Atmospheric air is compressed in an intercooled compressor, comprised of a LP compressor and a HP compressor. The discharge air from the HP compressor is preheated in a high temperature heat exchanger transferring the heat released from combustion of the depleted fuel leaving the MCFC (MCFC anode exhaust gas). This hybrid case may require a catalytic combustor because the depleted fuel is at lower temperature (typically in the neighborhood of 600C (1110F) in the case of MCFC versus 1000C (1830F) in the case of SOFC) and also lower pressure when compared to the SOFC based hybrids. Furthermore, it was found that in order to reach the 75% (LHV) efficiency target for this hybrid case, the fuel utilization had to be increased from the 85% value that was employed in the two SOFC hybrid cases to 90% fuel utilization resulting in a correspondingly lower heating value for the depleted fuel for the MCFC hybrid.

A blower provides the required amount of air for the combustion of the depleted fuel gas; the combustion air being first preheated against the MCFC cathode exhaust gas and then against the combusted depleted fuel gas. This configuration was found to be more efficient than a configuration where the combustion air is also supplied by the gas turbine exhaust; utilizing a separate combustion air blower increases the amount of heat that may be recovered from the cathode exhaust gas. In addition to providing heat for preheating the depleted fuel combustion air, the cathode exhaust gas provides heat for preheating the humidified fuel gas supplied to the MCFC. Preheating of the circulating water for the humidification of the desulfurized natural gas is accomplished by heat exchange against the combusted depleted fuel gas. A portion of the heat rejected by the intercooler is also recovered for the humidifier.

The optimum pressure ratio for the gas turbine from an efficiency standpoint for the proposed selected case was 25 while the gas turbine inlet temperature remained at a modest value of less than 1100C (2010F).

O_2 Breathing High Pressure SOFC Integrated with HAT cycle

This case as depicted in Figure B-4 is similar to the previously described HP SOFC integrated with the HAT cycle except that the SOFC utilizes pure O_2 supplied by an ion transport membrane (ITM) unit instead of air. The exhaust gas consisting of water vapor and CO_2 is cooled by direct contact with circulating water in a dehumidifier after heat recovery, a portion of the CO_2 is purged from the cycle while the remainder is combined with the O_2 supplied by the ITM unit and recycled to the suction of the HAT (assisted by the induced draft fan) in order to moderate the temperature within the SOFC. The CO_2

purged from the cycle may be compressed and to a pressure dictated by the ultimate disposal method chosen for sequestration. For this evaluation, a pressure of 60 bar (870 psi) was used in order to make a direct comparison with the advanced Rankine cycle case described next which produces the CO_2 at 60 bar (870 psi). This cycle in addition to producing CO_2 also produces water on a net basis for export. The resulting efficiency of the cycle is 60% on a LHV basis.

The pressure ratio for the cycle and the gas turbine firing temperature were kept at the same values as those for the SOFC/HAT hybrid case. The SOFC operating temperature sets the amount of CO_2 recycled.

Advanced Rankine Cycle Combusting H_2 with O_2

This cycle as depicted in Figure B-5 utilizes a high temperature and high pressure reheat steam turbine operating with inlet conditions of 1760C (3200F) and 222 bar (3220 psi) to expand the steam produced by combustion of H_2 with stoichiometric amount of O_2 in rocket engine technology derived combustor. The H_2 is produced in a steam/methane membrane reformer in which the H_2 chemically diffuses through a high temperature membrane as it is formed. Thus, the membrane reformer not only provides a separated pure H_2 product stream but also drives the reforming reaction to completion since one of the products of reaction (H_2) is continuously removed from the reaction mixture. The O_2 is produced in an ITM unit similar to the previous case. The steam turbine is similar to the turbine of a gas turbine because of the very high temperature of the working fluid. Both the HP and the reheat combustors utilize water injection to moderate the combustion temperature.

The CO_2 is recovered from the membrane reformer effluent for export at a pressure of 60 bar (870 psi). The resulting efficiency of the cycle is 52% on a LHV basis.

COAL BASED CASES

Integrated Gasification SOFC / GT Hybrid Systems

The analyses were begun with consideration of the integration of the dry feed entrained gasifier with a high-pressure SOFC hybrid, Figure B-6. This configuration uses a high-temperature cleanup system assumed to operate at 760C (1400F), set by alkali vapor condensation. Coal, ground and dried using steam extracted from the high pressure (HP) steam turbine exhaust, is fed to a gasifier operating at 66 bar (957 psi). Oxygen from an cryogenic air separation unit (ASU) is compressed and sent to the gasifier where it reacts with the coal and steam to produce a medium heating value gas. The syngas exits the gasifier at approximately 1400C (2550F) and is cooled to 760C (1400F) by raising steam. It then goes to a hot gas cleanup system. While there is no cleanup system currently operating at these extreme conditions, a system based on somewhat lower temperature cleanup technology was assumed. This system consists of a chloride guard (e.g., a sodium compound such as nahcolite), a transport hot gas desulfurizer (THGD) with zinc

or iron-based sorbents, and a barrier filter where over 99.99% of the particulates are removed. It is assumed that the sulfur can be removed down to the level required by the SOFC (< 0.1 ppm). The syngas then goes to the anode side of the SOFC. Air at approximately 55 bars and 470 °C is supplied by the intercooled gas turbine to the cathode of the SOFC.

The fuel to air ratio is determined by the need to maintain the 1000 °C operating temperature. More air is used strictly for cooling in these syngas based systems and the power density (kW/kg air) is lower, i.e., the ratio of fuel cell power to gas turbine power in the hybrid is less in the gasification configurations as compared to the natural gas based systems where internal reforming was assumed to take place. The significance of this will be discussed later.

After conversion of the syngas to electricity in the fuel cell, some chemical energy (typically 15% of the original heating value) remains allowing this exhaust gas to be combusted with the depleted air, and the combustion products then enter the gas turbine for expansion. A steam bottoming cycle gets its heat from the gas cooling and from a HRSG located in the gas turbine exhaust. The overall cycle efficiency is estimated to be 57.6% (HHV net) when all the power loads for oxygen production and compression, gasification and syngas cleanup, and the steam and gas turbine auxiliaries are taken into consideration. In all the configurations, the generators are assumed to be 98% efficient and the power conditioning for the SOFC is assumed to be 95% efficient.

In addition to the Figure B-6 configuration, a number of variations were analyzed to identify systems that would reach the DOE 60% goal. Prior investigations of the less complex and more easily cooled natural gas fueled SOFC/GT hybrid systems had demonstrated two main themes: 1) significant system interdependence in that a change in one parameter was reflected by many down stream changes; and 2) for a set configuration, the overall efficiencies were weak functions of these changes. For example, in these systems, a wide variety of pressure ratios for simple-cycle and intercooled gas turbines were considered, but the result was a narrow band of efficiencies, all generally above the DOE goal of 75% (LHV). With the syngas configurations, however, the cooling of the fuel cell is a critical issue and various methods of balancing the conditions of the cooling flows, the compressor discharge and the fuel flows were considered. These included different pressure ratio intercooled and simple-cycle gas turbines with high-, medium-, and low-temperature gas cleanup (see Figure B-7). As in the natural gas fueled configurations, the overall system efficiency is relatively insensitive to changes in the cleanup system or the compressor discharge conditions with a narrow band of efficiencies between 56.8% and 58.1%. For the systems considered, the peak efficiency occurred in a simple-cycle configuration at OPR = 29 with medium temperature (~ 400C or 750F) or warm gas cleanup.

Integrated Gasification SOFC / HAT Hybrid Systems

The HAT cycle has the promise of high efficiency and high power density. When used in an integrated gasification hybrid configuration, the additional cooling potential of the

humid air will mitigate the SOFC cooling issue. In the HAT cycle, the compressor discharge air is cooled in an aftercooler and sent to a humidifier where it contacts water heated by the intercooler, aftercooler and in the gas turbine exhaust. The air is humidified using this low-grade heat and the humid air then goes to a recuperator thereby recovering a major portion of the gas turbine exhaust heat prior to introduction to the SOFC. As in the SOFC/GT hybrid, unconverted fuel from the SOFC is burned to raise the temperature going to the gas turbine expander.

In the Figure B-8 configuration, a low-temperature cleanup system, e.g., Selexol® or Rectisol®, is used. The syngas from the gasifier is cooled initially by recycle of cooler gas, then further cooled by raising steam for process use and power generation. Prior to the sulfur cleanup (Selexol® was used to develop utilities), a catalytic hydrolysis unit converts the COS to H_2S by reaction with water vapor. Trace amounts of the sulfur species present in the treated gas leaving the Selexol® are removed by adsorption in an activated carbon bed. The acid gas from the Selexol® cleanup system is sent to a Claus plant for sulfur recovery while the tail gas leaving the Claus unit is hydrogenated and recycled. As in the case of the IGCC/SOFC hybrid, the overall efficiency (57% HHV) was not quite at the desired 60% HHV level. A number of variations were investigated resulting in a narrow band of efficiencies with a maximum efficiency of 57.5% HHV occurring in a system having a high-pressure ratio (OPR ~ 55) HAT and a high-temperature (~ 760C or 1400F) cleanup. As humidification increases, the power ratio decreases, falling below that of the SOFC/GT hybrid.

Advanced Transport Reactor Gasifier

The system efficiencies for these high temperature entrained flow gasifiers did not quite reach the DOE goal of 60% (HHV). An alternative gasifier type was then investigated. Kellogg Brown & Root and Southern Services Company are developing the Advanced Transport Reactor (ATR) gasifier under sponsorship of the DOE at Wilsonville, Alabama (Swanson, M. and Hajicek, D., 2002, Leonard, R., et.al., 2001). A smaller scale ATR is also operated by the Energy and Environmental Research Center at the University of North Dakota (UNDEERC). A schematic of a SOFC/GT hybrid integrated with the ATR is shown in Figure B-9.

In this system, a small fraction of the compressor discharge air is sent to an aftercooler, boosted in pressure, recuperated and sent to the mixing zone of the ATR gasifier. Steam is also injected at this point. Coal is added to the upper stage of the mixing zone. The gas exist the top of the gasifier riser and goes to a primary cyclone that is connected to a standpipe that receives the unburned char and ash/bed material for recirculation back to the mixing zone. A purge stream, which maintains inventory, is removed and mixed with discharge from the downstream filter for use in a char burner. The syngas leaves the gasifier at approximately 1070 °C and is cooled to 590 °C by superheating/reheating steam in a gas cooler. It then goes to the chloride guard, the THGD sulfur removal system, and then to a barrier filter where over 99.99% of the remaining particulates are removed. Again, it is assumed that the sulfur can be removed to the < 0.1 ppm level. A slipstream of the cleaned gas is cooled, boosted in pressure, recuperated and used to back

purge the filter and enhance solids flow. The recovered char and purged bed material are burned in an atmospheric fluid bed (AFBC) and the heat is recovered by superheating steam. The overall cycle efficiency was estimated to be 60% (HHV net), the DOE goal.

The main reasons that the ATR configuration is more efficient than the entrained flow configurations are that the raw syngas leaves the gasifier at a lower temperature (thus carrying less sensible heat with it), and has a correspondingly lower oxidant demand. Furthermore, the lower raw syngas temperature requires less cooldown, making the syngas coolers less expensive. On the other hand, the heating value (dry) of the syngas from the ATR is roughly half of that from the entrained flow (~ 5.4 MJ/m^3 vs. 10.7 MJ/m^3) because the gasifier was air blown. With this scheme, the gas turbine expander must be able to handle additional flow. Generally, this flow can be accommodated by vane reclassification and will not require gas path changes. If this fuel is to be used directly in the gas turbine, however, there could be concern about burnability, especially if additional moisture were present, e.g., in the case of the HAT cycle. When used in the SOFC, the additional mass of fuel may help in the cooling process. The SOFC can be overcooled, that is the heat removal capability of the fuel and oxidant streams could reduce the temperature of the SOFC below its desired operating temperature of 1000 °C.

To assess these effects, an oxygen-enriched configuration and a fully oxygen-blown configuration were analyzed. In the enriched case, the molar concentration of O_2 was increased from ~ 20% to ~ 40%, while in the fully blown case, 95% O_2 was used. The heating values of the syngas increased (6.65 and 9.2 MJ/m^3 respectively) and the fuel mass flow decreased, resulting in modest gains in system gross efficiency of 0.6 percentage points. The net system efficiencies decreased however, mainly due to the power requirements for the ASU. The net efficiency of the enriched case decreased by 1.4 percentage points, while that of the fully oxygen blown case decreased by 2.4 percentage points.

Partial Gasification Hybrid Systems

A third gasifier type, one in which the coal is only partially gasified, was also investigated. This gasifier is being developed by Foster-Wheeler Corporation under DOE sponsorship at Wilsonville, Alabama. A simplified schematic of the gasification concept as used in one version of the power systems is shown in B-10. Coal is crushed and mixed with bed material and transported in an air stream to a pressurized vessel. Air extracted from the gas turbine compressor is boosted in pressure and a portion of it is used to partially oxidize the coal. Only enough air is used to “carbonize” the coal, i.e., raise the temperature enough to drive off the volatiles. The syngas, which has been cleaned of most of its sulfur by the bed material, goes to cyclones and filters to remove the char carry over. It then goes to the alkali metal removal unit and then to the power system. The char, containing approximately 20% of the original carbon, is combusted. The char combustor could consist of an AFBC, or a pressurized circulating fluid bed combustor (PCFBC) in which case air extracted from the gas turbine compressor is also supplied to the char combustor and the hot products of combustion may be sent to the power system. Depending on the chosen hybrid configuration, some or all of the syngas would go to the

SOFC after suitable sulfur polishing, as would the heated air. The assumption being made here is that the amount of tars and oils produced in the partial gasifier are insignificant or that these may be hydrogenated easily downstream of the gasifier (catalytically, downstream of the particulate removal filter). Otherwise the tars and oils would accompany the syngas to the fuel cell where they could give rise to carbon formation and may also contain significant amounts of sulfur that would poison the anode.

Rather than repeat the Foster-Wheeler work, different configurations using the partial gasifier were considered. In the first, (Figure B-10), the heated air and the majority of the fuel gas are sent to the SOFC where they react to produce electricity. The SOFC exhaust has some unburned hydrocarbons and excess oxygen, which react to raise the temperature of this stream. This mixture combusts with the fuel fraction sent to the gas turbine to raise the flow temperature to the gas turbine design point (~1370C or 2500F). The efficiency is estimated to be 54.4% (HHV). This includes losses for coal preparation, cleanup, and internal compression.

A variation of this configuration was then investigated. Prior analyses have shown that the highest efficiencies occur when all the fuel is used in the topping portion, i.e., the SOFC. Thus, an unfired version was analyzed. Here, all the fuel gas is sent to the SOFC and the gas turbine temperature (~1275C or 2330F) is that resulting from combusting remaining fuel components in the SOFC exhaust. This system has an efficiency of 54.8%, marginally better than the fired version.

As with the other gasifiers, with both heated air and heated fuel being sent to the SOFC, cooling becomes an issue. Foster-Wheeler opted to steam cool the SOFC in their hybrid system. The UCI team has defined the method to cool the SOFC as excess air and/or by using some of the SOFC heat to reform the fuel. As with the other gasifiers, there is not enough methane fraction to adequately cool the SOFC without high excess air. Thus, SOFC participation (amount of fuel "burned" in the SOFC) is limited, i.e., the syngas fueled SOFC's cannot be run as near to stoichiometric conditions as the methane fueled systems. The issue with the F-W partial gasifier with the air-cooled SOFC is how to best use the heat represented by the char, approximately 20% of the input energy. Since the hot pressurized air, especially air that has to be exceptionally clean of particulates, alkalis, and sulfur, has no cooling benefit to the SOFC, other configurations are possible.

Instead of the PCFBC, a configuration using an AFBC was defined. The use of an AFBC simplifies the system. There is no longer a need for high-pressure transport of hot char from the gasifier to the char combustor, nor is there a need for the highly efficient cleanup of hot air from the PFBC prior to going to the SOFC. The disadvantage, however, is that the AFBC may have to operate with bed temperatures of 850 – 900C (1560 – 1650F) to maximize sulfur capture in the bed. This limits the bed coolants to 815 – 840C (1500 – 1545F). The air and the steam for the gasifier are heated in the AFBC char burner, leaving the majority to be recovered as steam for use in the steam bottoming cycle.

Once again with this configuration, a series of analyses were made to determine the best efficiency. The highest performance was obtained when all the syngas went to the SOFC and the characteristics of the steam flow were adjusted to maximize efficiency. Since maximum use of the fuel is taking place, i.e., all of the energy available from the gasifier as syngas and char is being utilized, the cycle efficiency now becomes a function of the steam cycle. With a conventional 165.5 bar/565C/565C (2400 psi/1050F/1050F) steam cycle, the system performance is 59.3% (HHV). An advanced supercritical steam cycle (310 bar/565C/565C or 4500 psi/1050F/1050F) results in an efficiency of 60.5%, meeting the DOE performance goal, while using the steam system of 414 bar/705C/705C/705C (6000 psi/1300F/1300F/1300F) that Foster-Wheeler had utilized in their analyses, the efficiency reached 61.7%. Thus, the F-W partial gasifier with an AFBC char burner has the potential to reach the DOE goal. Additional analyses would no doubt identify a more modest steam system that would allow the system to reach the 60% goal.

REFERENCES

1. Swanson, M., Hajicek, D., Lignite Testing in an Advanced High-Temperature, High-pressure Transport Reactor Gasifier, Final Report, 2002-ERC-08-01, August 2002.
2. Leonard, R., Rogers, L., Vimalchand, P., Liu, G., Smith, P., Longanbach, J., Development Status of the Transport Gasifier at the PSDF, presented at the 2001 EPRI Gasification Technologies Conference, San Francisco, CA, October 7–10, 2001.

Table B - 1: Summary of Performance Estimates - Screening Analysis of Natural Gas Cases

	Efficiency Maximization Cases			CO_2 Rrecovery Cases	
	SOFC + ICGT Hybrid	**SOFC + HAT Hybrid**	**MCFC + ICGT Hybrid**	**SOFC + HAT Hybrid**	**Adv. Rankine Cycle**
Fuel Cell Power, %	72	68	74	68	-
Gas Turbine Power, %	28	32	26	32	100
Thermal Efficiency, % LHV	75	75	70	60	52
Specific Power, kW/lb/s	985	1000	830	800	-

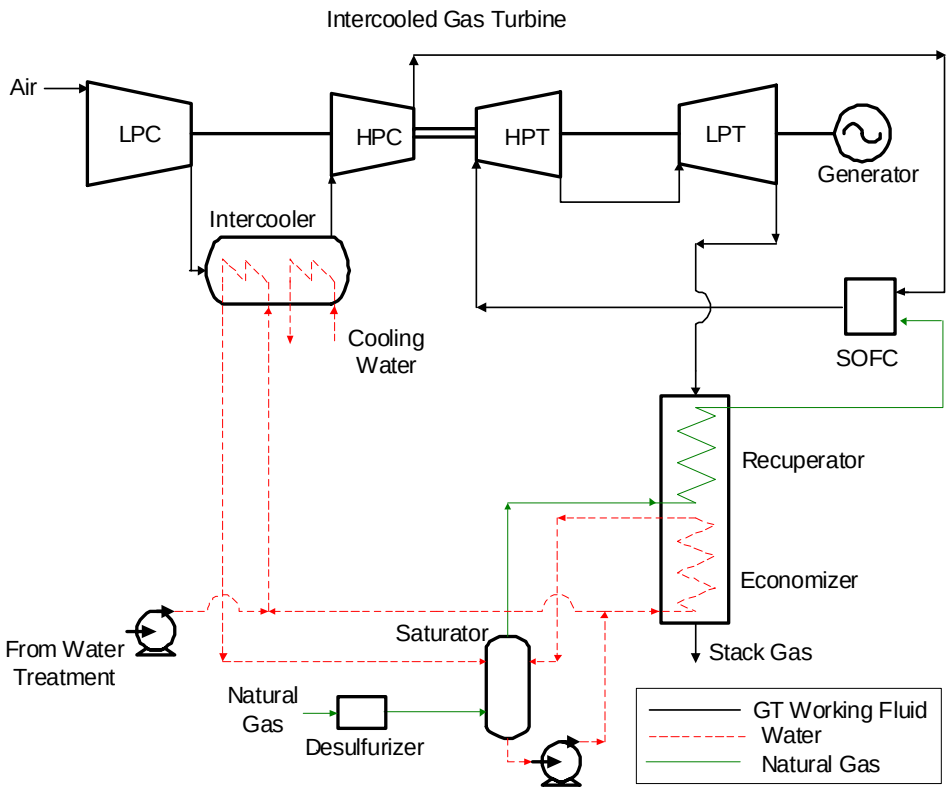

Figure B - 1: High Pressure SOFC/Intercooled Gas Turbine Hybrid

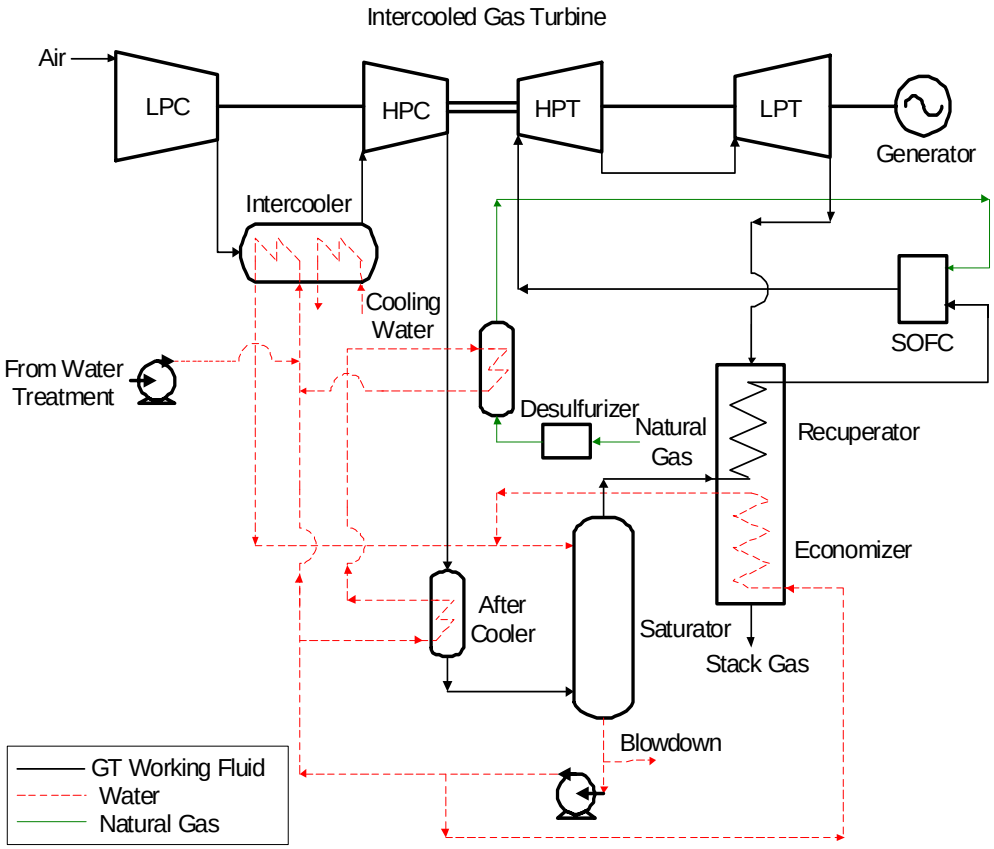

Figure B - 2: High Pressure SOFC/HAT Hybrid

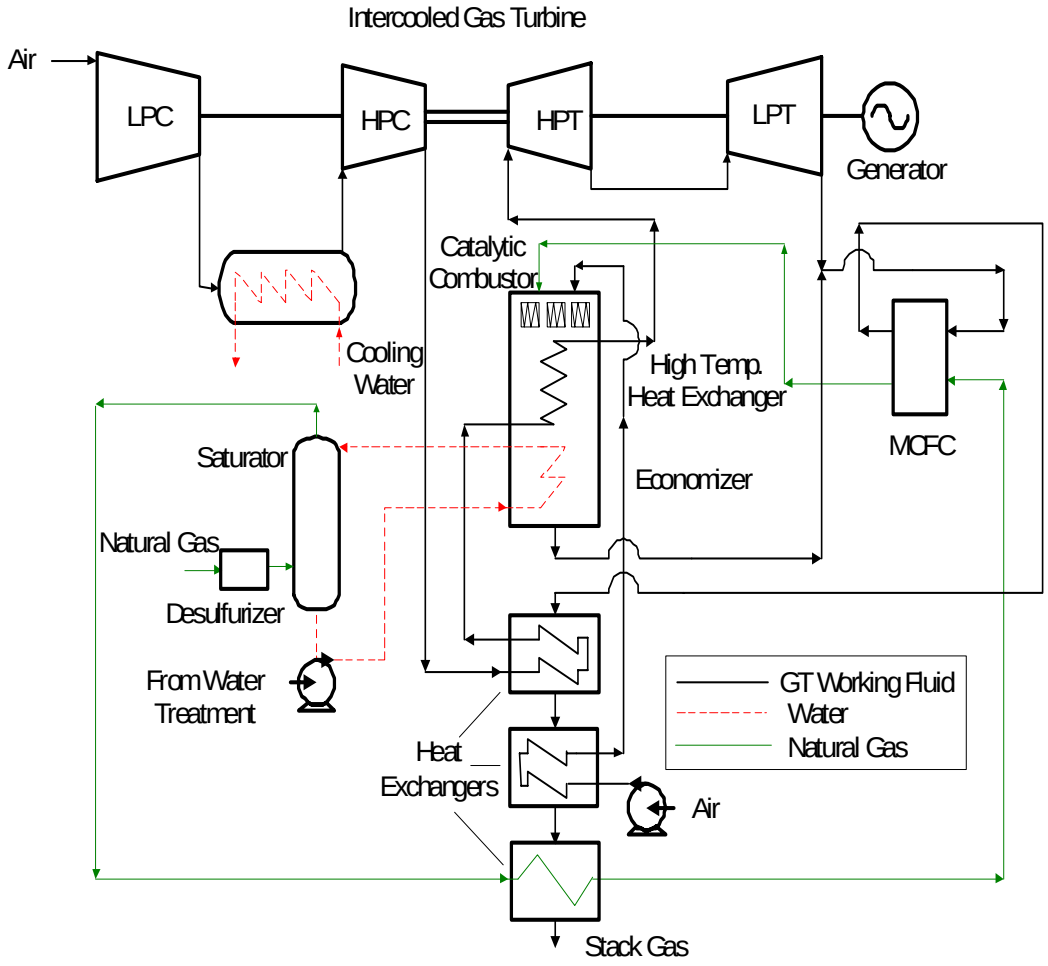

Figure B - 3: Atmospheric Pressure MCFC/Intercooled Gas Turbine Hybrid

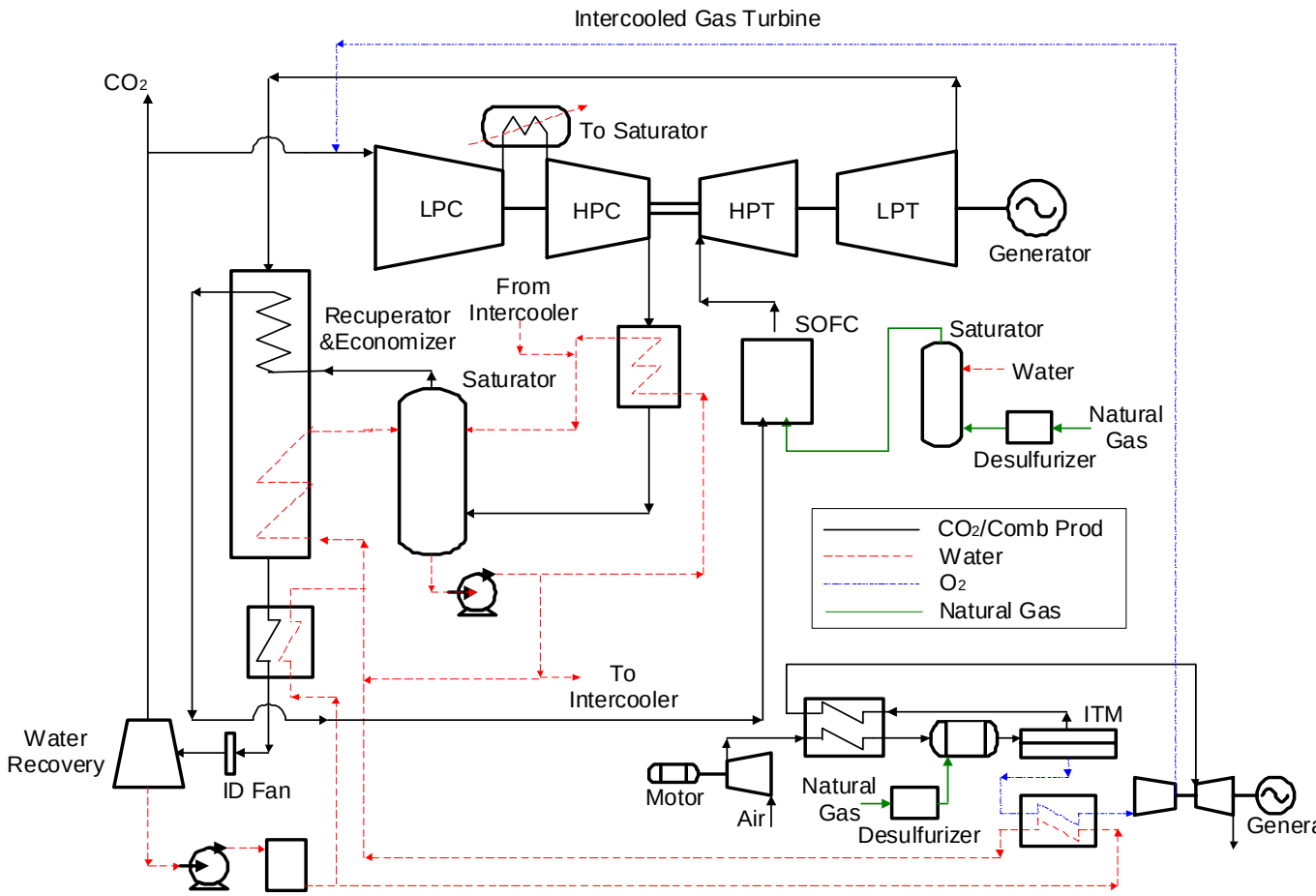

Figure B - 4: O_2 Breathing High Pressure SOFC/HAT Hybrid with CO_2 Recycle

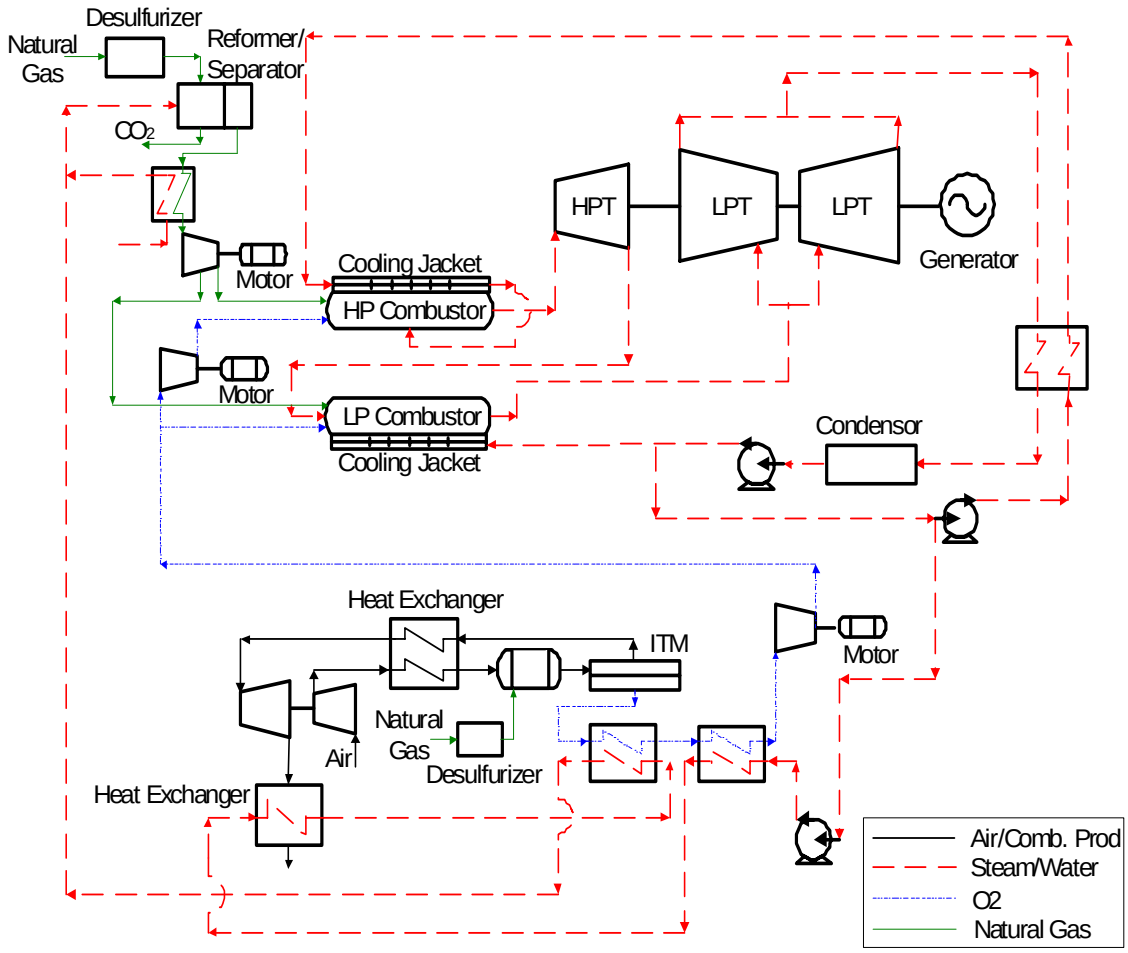

Figure B - 5: Advanced Rankine Cycle/Combusting of H_2 with O_2

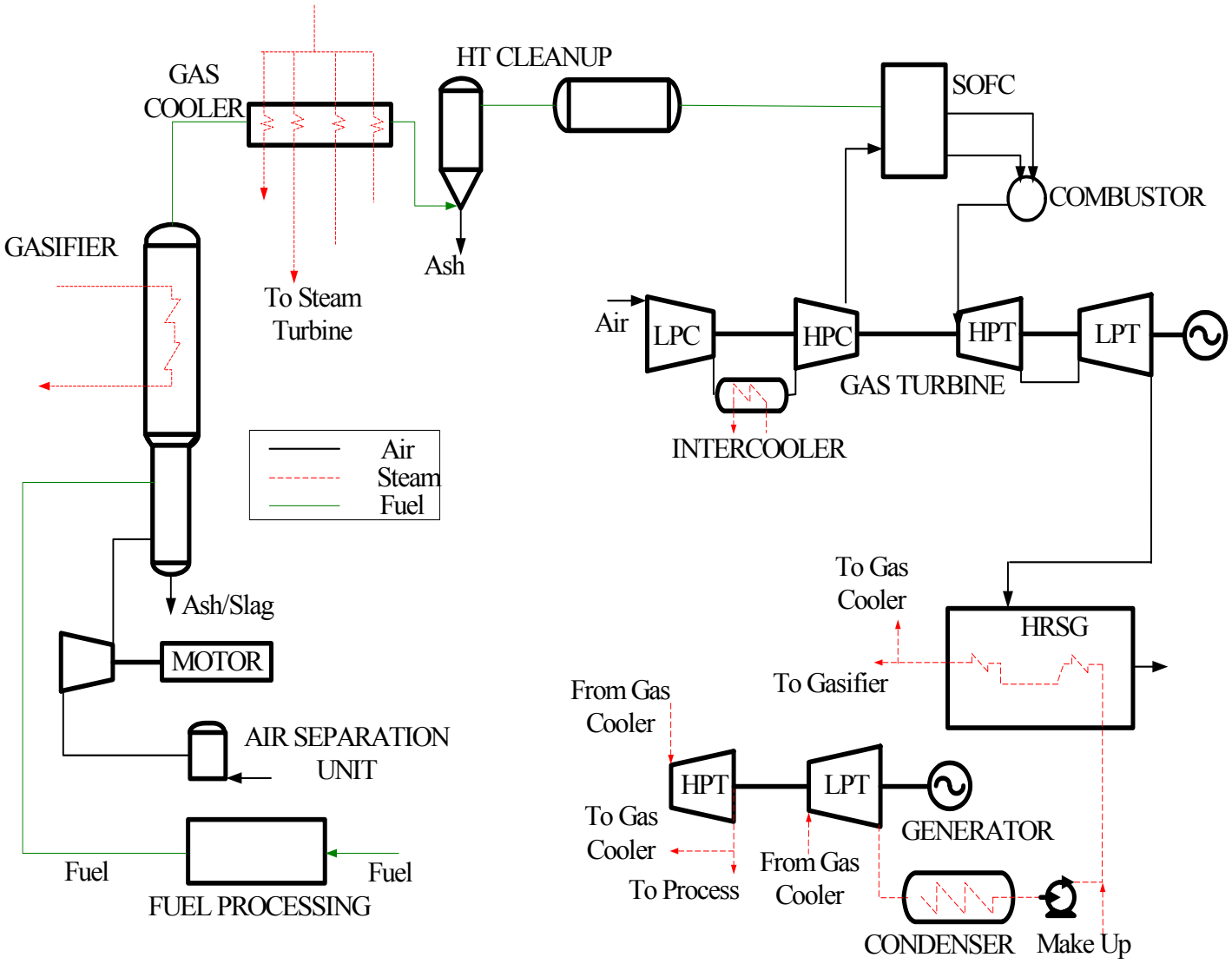

Figure B - 6: Entrained Bed IGCC/Hybrid with HT Cleanup

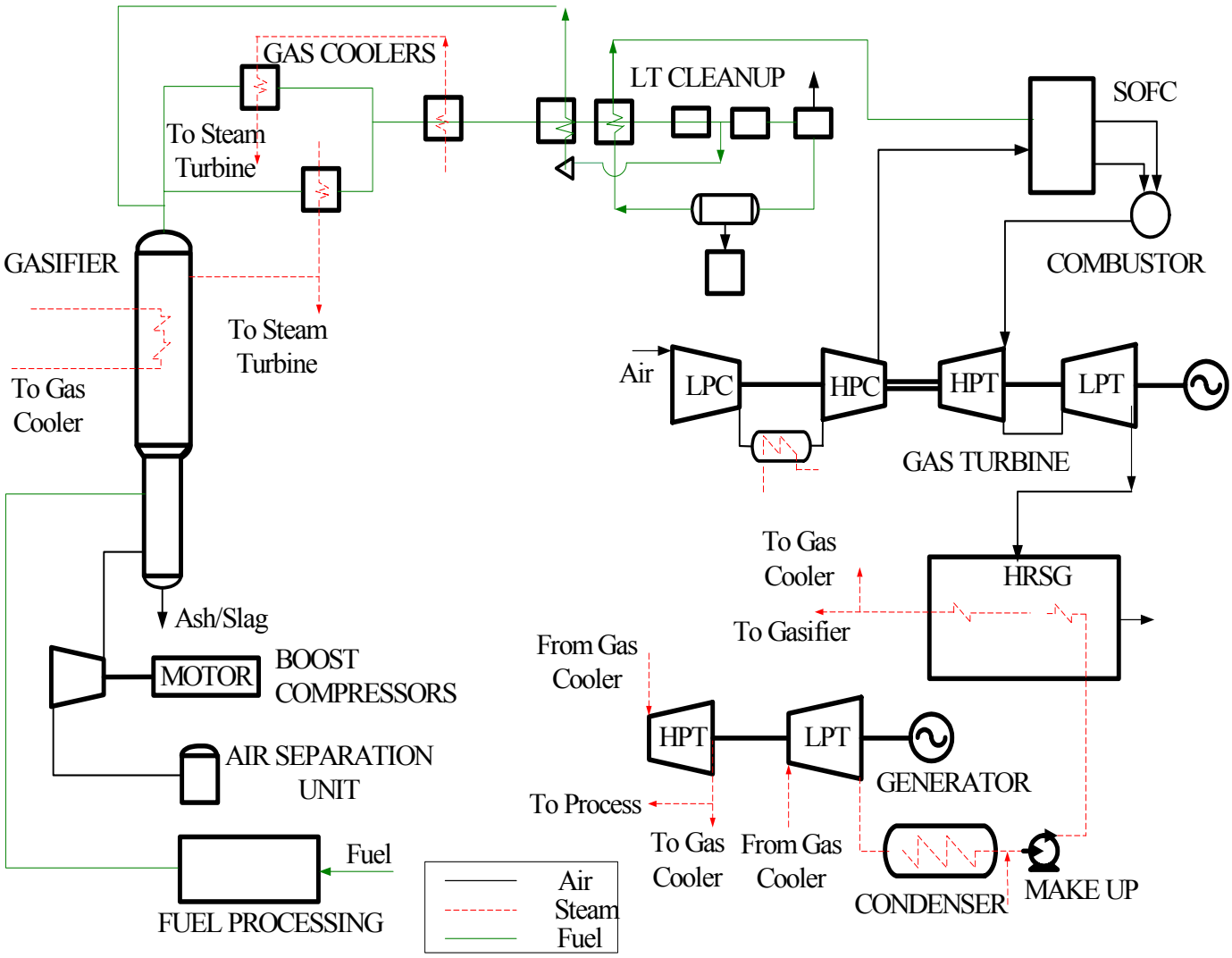

Figure B - 7: Entrained Bed IGCC/Hybrid with LT Cleanup

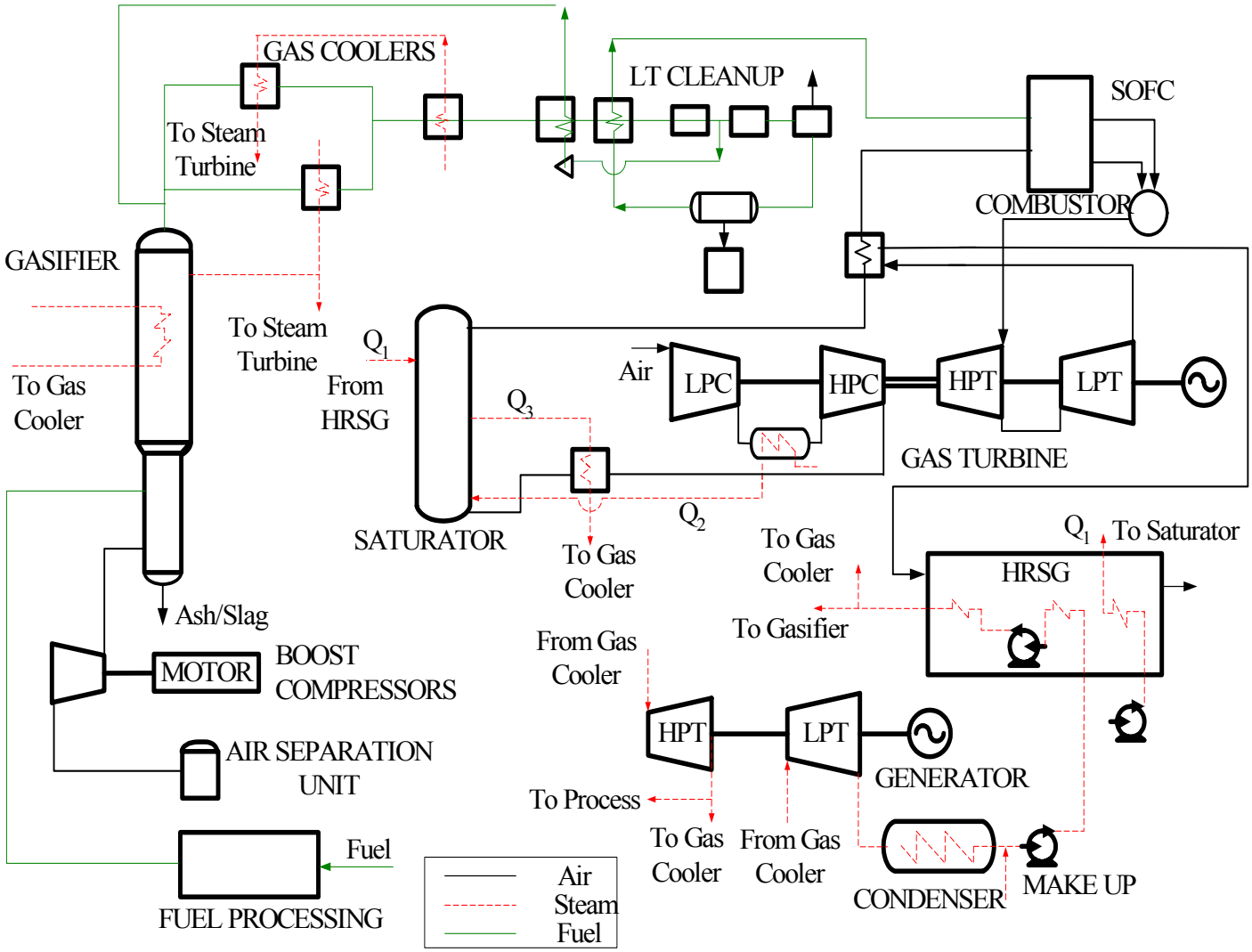

Figure B - 8: Entrained Bed IGHAT with LT Cleanup

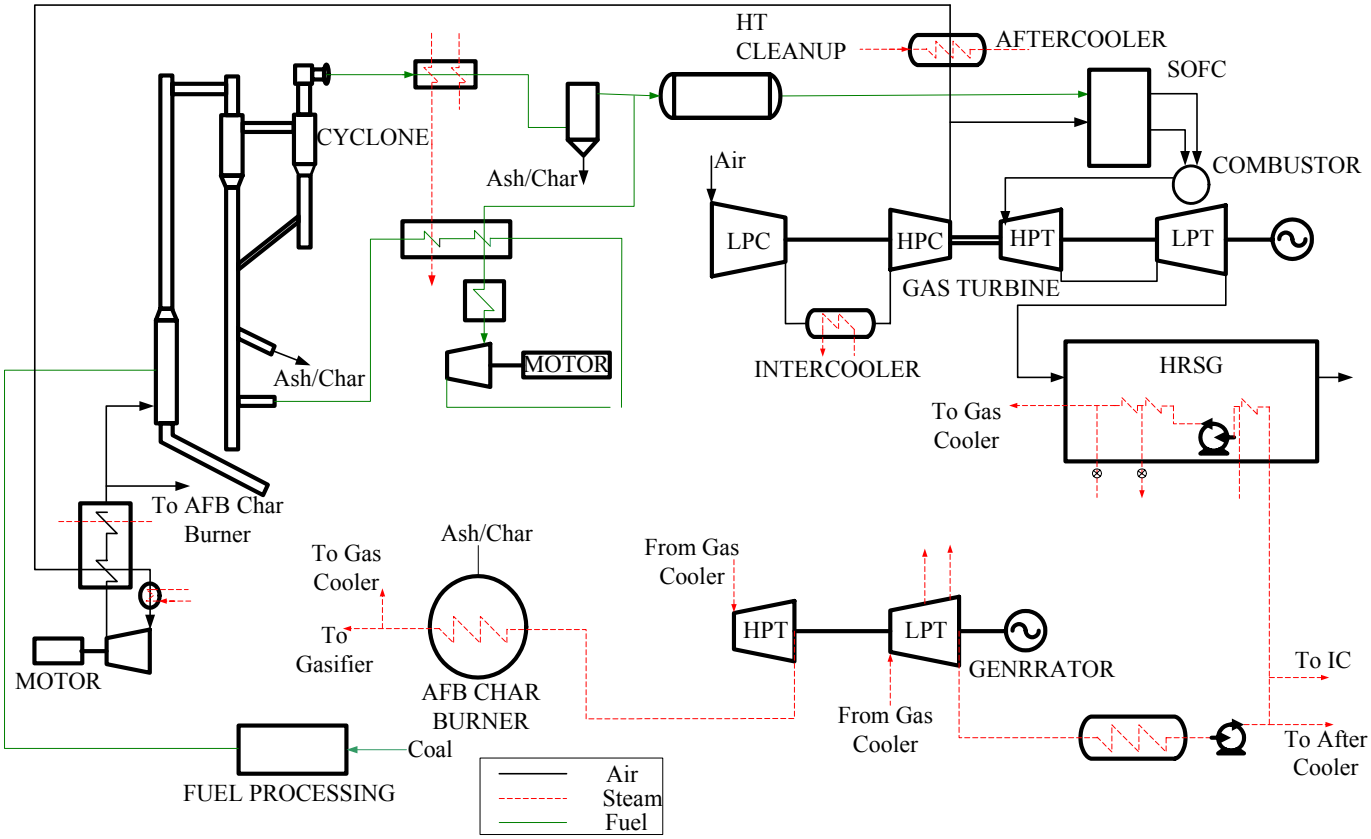

Figure B - 9: Air Blown ATR IGCC Hybrid

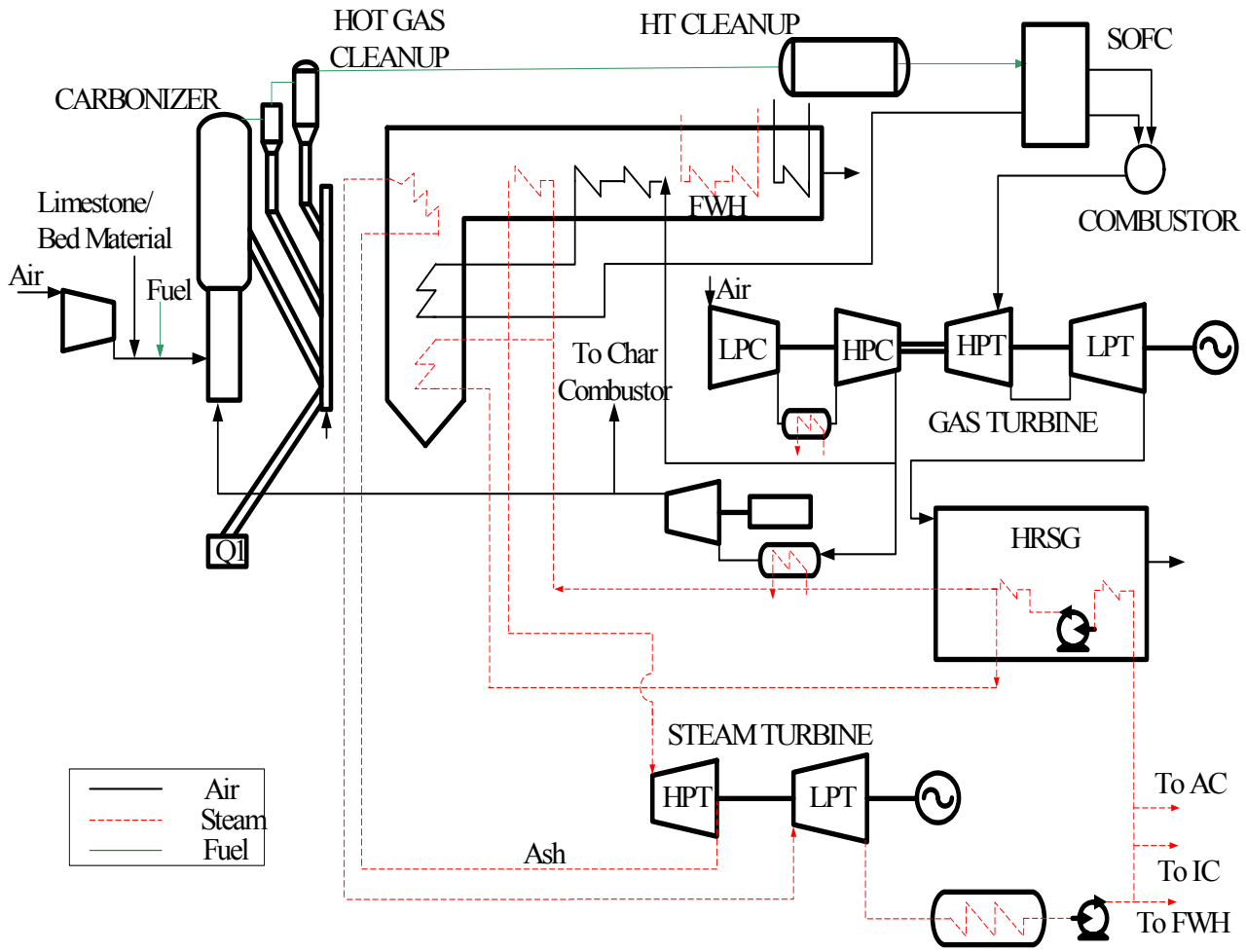

Figure B - 10: Foster-Wheeler Partial Gasifier with Char Combustor

APPENDIX C - BASE CASES

COAL BASED IGCC PLANT WITHOUT CO_2 RECOVERY

Process Description

The reference plant is derived from the DOE report PED-IGCC-98-006 titled "Transport Gasifier IGCC Base Cases" dated September 1998 (Latest Revision 2000) for comparison purposes. The overall plant performance is updated for the lower carbon conversion of 95% and higher gasifier operating temperature (i.e., syngas exit temperature) of 1050C (1920F) based on information provided by Southern Services Company. The net power output is held constant while the coal feed rate to the plant is increased due to the increase in the overall heat rate. The costs are updated to 2nd Quarter 2004 utilizing an annual escalation rate of 2%, and a mercury capture step is added similar to that in the Vision 21 case "Coal Based Advanced Transport Reactor (ATR) Gasification SOFC Hybrid." Adjustments are also made to the plant costs to account for the higher coal feed rate.

The updated performance and costs for this plants are used as the baseline for coal based system without CO_2 capture. The system is an IGCC and utilizes the Siemens-Westinghouse 501 G gas turbine. This turbine has the following features:

- 16 can-type combustors in a circular array
- Directionally solidified blading and thermal barrier coating
- 16-stage axial-flow compressor
- Advanced cooling technology (e.g., steam-cooled combustor and transition section)
- Four-stage turbine
- Optional multiple fuels capability
- Advanced aero-engine technology; three-dimensional airfoil design in compressor and turbine
- Low-NOx combustion system
- Pressure ratio – 19.2;1
- Inlet Air flow – 563.1 kg/s / 1241 lb/s
- Rotor Inlet Temperature – 1477 C / 2583 F

The steam system is a three pressure level reheat cycle with the steam turbine inlet conditions at the following conditions: 124 bar/ 566 C/ 23.6 bar/566 C/ 2.4 bar (1800 psia/1050 F/342 psia/1050 F/35 psia). The gasifier consists of an air-blown ATR fed also with Illinois No. 6 coal and warm gas cleanup system.

Performance and Cost Estimates

The IGCC plant produces 415.4 MW of net electric power at a thermal efficiency of 48.2% (HHV). The ROM total plant installed cost (see Table C-1) is $1161/kW resulting in a 10th year levelized cost of electricity of 39 Mills / kWh.

COAL BASED IGHAT PLANT WITH CO_2 RECOVERY - "ZERO EMISSION" WITH NEARER TERM TECHNOLOGY

Process Description

This case is included in the analysis in order to provide a "Base Case" for comparing the performance improvement that may be expected by the incorporation of the Vision 21 technology in a plant producing power while capturing the CO_2. As depicted in Figure C-1, the high pressure O_2 blown slurry fed entrained bed "total quench" gasifier (Texaco type) with cold gas cleanup is utilized while shifting the scrubbed sour syngas (pre-combustion CO_2 recovery) followed by desulfurization of the syngas as well as CO_2 removal/capture in a Selexol® unit. The acid gas generated in this unit is supplied to a Claus sulfur recovery unit and the tail gas from the Claus unit (after hydrogenation) is recycled back to the Selexol® unit. The power block consists of the HAT cycle which is chosen because it integrates synergistically with the "total quench" gasifier (Rao, et. al., 1993).

Performance Estimates

The plant consumes bituminous coal while producing 387 MW of net electric power and capturing 85% of the gaseous carbon compounds present in the syngas. The resulting overall plant net thermal efficiency is 32.8 % (HHV).

REFERENCES

1. DOE Report PED-IGCC-98-006, "Transport Gasifier IGCC Base Cases," September 1998 (Latest Revision 2000)
2. Rao, A. D., et. al., EPRI Report TR-102156, "A Feasibility and Assessment Study for FT4000 Humid Air Turbine (HAT)," September 1993.

Table C - 1: ROM Cost Estimate – Coal based IGCC Plant without CO_2 Recovery

All costs are in 1000$								Study Case			
	Reference Case Source	Reference Case Capacity	Study Case Capacity	Capacity Units	Reference Case Cost, $	Reference Case Cost Year	2nd Q 2004 Reference Case Cost, $	2nd Q 2004 Cost, $	Process Contingency		2nd Q 2004 Cost
Plant Section									%	$	with Cont. $
Coal Preparation	DOE Report PED-IGCC-98-006	2,927	3,021.2	ST/D Coal	16,686	1st Q 1999	18,514	18,929	0	0	18,929
Limestone Receiving/Handlin	DOE Report PED-IGCC-98-006	2,927	3,021.2	ST/D Coal	6,809	1st Q 1999	7,555	7,724	0	0	7,724
Transport Gasifier	DOE Report PED-IGCC-98-006	2,927	3,021.2	ST/D Coal	57,609	1st Q 1999	63,921	65,354	30	19,606	84,960
Recycle Compression	DOE Report PED-IGCC-98-006	2,927	3,021.2	ST/D Coal	1,520	1st Q 1999	1,687	1,724	5	86	1,811
Air Boost Compression	DOE Report PED-IGCC-98-006	2,927	3,021.2	ST/D Coal	6,808	1st Q 1999	7,554	7,723	0	0	7,723
Gas Conditioning	DOE Report PED-IGCC-98-006	2,927	3,021.2	ST/D Coal	20,216	1st Q 1999	22,431	22,934	15	3,440	26,374
Transport Desulfurizer	DOE Report PED-IGCC-98-006	2,927	3,021.2	ST/D Coal	13,565	1st Q 1999	15,051	15,389	15	2,308	17,697
Hg Capture	ADA	75	134.1	kg/s Syngas	3,600	2nd Q 2004	3,600	5,427	15	814	6,241
Gas Turbine	DOE Report PED-IGCC-98-006	273	272.8	MW	54,136	1st Q 1999	60,067	60,067	5	3,003	63,071
HRSG/Steam Turbine	DOE Report PED-IGCC-98-006	163	162.6	MW	47,192	1st Q 1999	52,362	52,362	0	0	52,362
Ash Handling	DOE Report PED-IGCC-98-006	2,927	3,021.2	ST/D Coal	4,722	1st Q 1999	5,239	5,357	0	0	5,357
Sulfator	DOE Report PED-IGCC-98-006	2,927	3,021.2	ST/D Coal	13,738	1st Q 1999	15,243	15,585	15	2,338	17,923
Subtotal Installed Costs								278,576		31,596	310,172
Water Systems	DOE Report PED-IGCC-98-006	1,072	1,072.0	ST/D Raw Water	11,452	1st Q 1999	12,707	12,707	0	0	12,707
Civil/Structural/Architectural	DOE Report PED-IGCC-98-006	2,927	3,021.2	ST/D Coal	20,658	1st Q 1999	22,921	23,435	0	0	23,435
Piping	DOE Report PED-IGCC-98-006	2,927	3,021.2	ST/D Coal	11,452	1st Q 1999	12,707	12,992	0	0	12,992
Control/Instrumentation	DOE Report PED-IGCC-98-006	2,927	2,927.0	ST/D Coal (Note 1)	5,838	1st Q 1999	6,478	6,478	0	0	6,478
Electrical	DOE Report PED-IGCC-98-006	435	435.4	MW Gross Power	17,963	1st Q 1999	19,931	19,931	0	0	19,931
Subtotal Plant Costs								354,118		31596	385,714
Engineering Fees @ 10%											38,571
Process Contingency	(Increased Process Contingency for "Transport Gasifier" from 20 to 30% to include syngas cooler to cool gas to 400C for Hg Removal)										31,596
Subtotal											70,167
Project Contingency @ 15%											57,857
Total Plant Cost											**482,142**
TPC $/kW											**1,161**

Note 1: Assume same cost as reference case (thus coal rate kept same as reference).

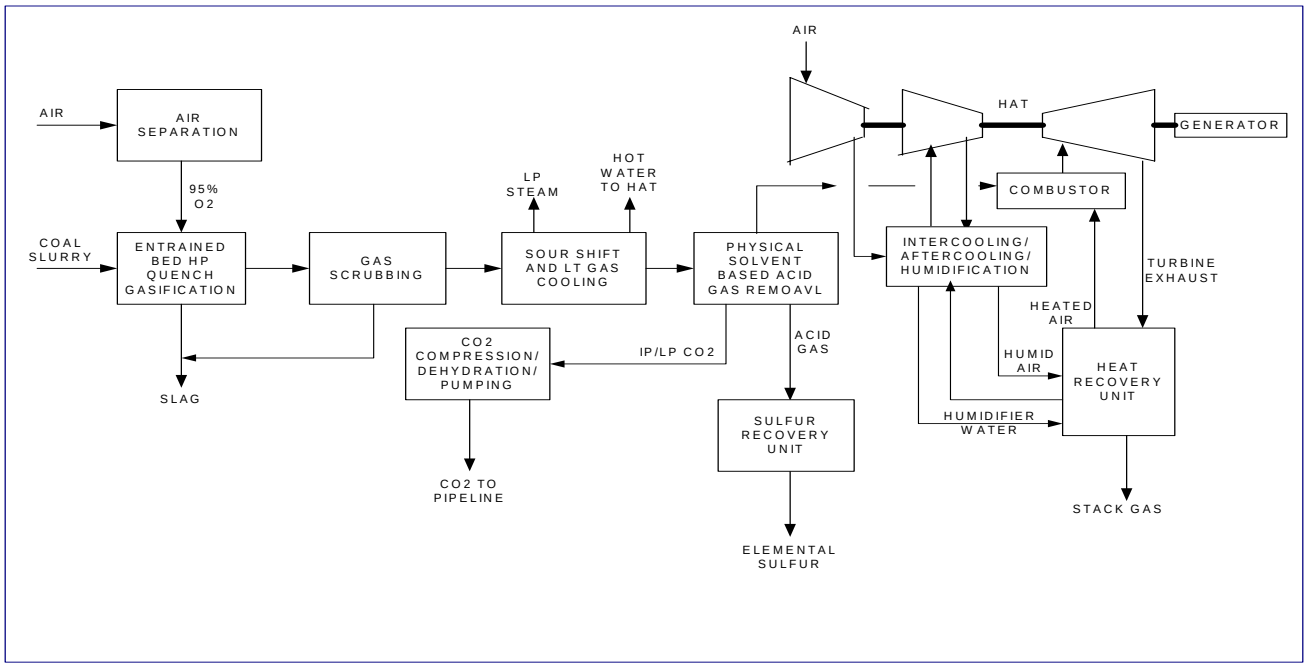

Figure C - 1: Block Flow Sketch - Coal Based "Zero Emission" Plant with Nearer Term Technology

APPENDIX D – ECONOMIC ANALYSIS METHODOLOGY

BASIS OF ECONOMIC ANALYSIS

Levelized cost of electricity is developed utilizing the methodology as developed by the Electric Power Research Institute and described in the following. The basis for the financial input for determining the cost of electricity is presented in Table D - 1.

Organization and Start-up Costs

Organization and start-up costs are intended to cover pre-project administrative costs and operator training, equipment checkout, changes in plant equipment, unplanned maintenance, and inefficient use of coal and other materials during plant commissioning and start-up. These are the sum of the following:

- One month of fixed operating and maintenance costs.
- Two months of consumable costs excluding fuel cost (calculated at full capacity).
- One month of fuel inefficiency (25% excess fuel at full capacity).
- Two percent of total plant cost (TPC).

Working Capital

Working capital is the sum of the following:

- Two months of consumable costs excluding fuel cost (calculated at full capacity).
- Two month supply fuel at full capacity.
- Three months of operating and maintenance labor costs.
- Spare parts inventory at 0.5% of the total TPC.
- A contingency of 25% of the total of the above four items.

Land Costs

Although land costs are site-specific and variable, a nominal cost of $7,200/acre was used in this study.

Operating and Maintenance Cost Estimates

The annual operation and maintenance costs are divided into fixed and variable cost components and credit for by-product sulfur. Description of the basis and computations for these cost components are given below:

Fixed Operating Costs

The fixed operating costs are essentially independent of the plant capacity factor and are composed of the following charges:

- Operating labor
- Maintenance costs
- Overhead charges

These items are discussed below.

Operating Labor - the operating personnel per shift required for the plant is computed using an average labor rate of $34.00 per person-hour. This rate includes payroll burdens. A typical operating labor cost calculation (in units of $/yr) is given below:

(OJ) (ALR) (8760 hr/year)

where:

- "OJ" is the average number of operating positions per shift for a given plant.
- "ALR" is the hourly labor rate including payroll burden.

Fixed Maintenance Costs – Maintenance costs are estimated as a percentage of the installed unit installed cost of the facilities including contingency (see Table D - 2). The system-by-system annual maintenance cost factors are divided into fixed and variable maintenance costs (65% and 35% respectively). The fixed maintenance costs is then divided into labor and materials (40% and 60%, respectively).

Overhead Charges – The only overhead charge to be included in a power plant is a charge for administrative and support labor, which is taken as 30% of the operating and maintenance labor.

Variable Operating Costs

The variable operating costs are composed of the following charges:

Raw Water – The assumed raw water cost is assumed 2 cents/1000 gal. Treating costs and pumping costs are included in the operating and maintenance charges.

Catalyst and Chemicals and Other Consumables – The catalyst, chemicals, and other consumable costs are estimated for each case utilizing the prices presented in Table D - 3.

Slag Disposal – Disposal of slag from the gasification process is estimated to cost $5.814/dry ST.

Variable Maintenance Labor and Materials – Costs are 35% of total maintenance cost of the plant. The variable cost is divided into labor and materials (40% and 60%, respectively).

By-Product Credit

None.

Operating and Maintenance Costs

Using the operating and maintenance (O&M) cost estimating basis described in the proceeding section, project O&M costs are estimated for each case.

Fuel Cost

The assumed cost for the Illinois No. 6 coal is $1.126/MMBtu on a HHV basis with an annual escalation rate 0.42% over the general inflation based on the projections made by the EIA for the period beyond 2020 when these advanced power plants are expected to be available.

Table D - 1: Financial Input for COE Calculations

Project Book Life	20 Years
Project Tax Life	20 Years
Escalation Rates	
Total Plant Cost	3%/y
General	3%/y
Property Taxes	0.1% of Escalated Total Plant Cost
Insurance	0.7% of Escalated Total Plant Cost
Federal + State Income Tax	38%
Project Financing	
Common Equity	65%
Debt	35%
Maximum Annual Capacity Factor	85%

Table D - 2: Maintenance Cost Factors

Plant Section	Annual Cost as a % of Installed Plant Section Cost
Coal Receiving & Storage	3.0
Limestone Receiving/Handling	3.0
Transport Gasifier	4.5
Recycle Compression	3.0
Air Boost Compression	3.0
Air Humidification	2.0
Gas Conditioning	2.0
Transport Desulfurizer	2.0
Hg Removal	2.0
Reactor Expander	3.0
SOFC System	3.0
Gas Turbine	3.0
HRSG/Steam Turbine	3.0
Ash Handling	3.0
Sulfator	2.0
Water Systems	2.0
Civil/Structural/Architectural	2.0
Piping	2.0
Controls/Instrumentation	1.5
Electrical	1.5

Table D - 3: Catalyst and Chemicals

Catalyst/Chemical	Cost	
HGCU SORBENT	6,657	$/ST
NAHCOLITE	305	$/ST
METHANATION CATALYST	40	$1000/YR
Hg REMOVAL ADSORBENT	67	$1000/YR
WATER TREATMENT CHEM	0.010541	cents/lb
SORBENT (LIMESTONE)	18	$/ST

APPENDIX E – GAS TURBINE DEVELOPMENT NEEDS

The fuel cell based hybrid application dictates the following, unusual operating demands on the gas turbine:

- Need for oil free compressor discharge air
- Ability to get air off and hot air (combustion products) back
- Ability to run efficiently at firing temperatures lower than currently used (large turbines)

There are other desirable features including improved materials to reduce cooling and allow high moisture content and intercooling to boost the power density and thereby lower the overall hybrid costs. But these are technologies that benefit all turbines (intercooling being beneficial to gas turbines with very high pressure ratios), and are not unique to the hybrid.

Smaller turbines, micro (defined here as >20 kW<200 kW) or mini (defined here as >200 kW<2 MW), can approach the first requirement through use of air bearings. However, larger turbines, especially those above 10's of MW would have difficulty and require an extensive bearing R&D program to develop, air or magnetic bearings. A simpler approach would be to run the cold end bearings at a slight vacuum so any leakage is inward, and any oil carry over is towards the vacuum pump, not the main flow. This will require some development, but is a quicker and more palatable approach.

Getting the air off the machine requires room, but is a geometry problem and is solvable. Getting the hot oxidant and spent fuel from the pressurized fuel cell back to the engine "combustor", or ducting combustion products from an exogenous fuel cell combustor is a more difficult problem. The combustor, however, does not have to be located in the gas path but can be off base, as long as there is sufficient room to duct the products back on board the engine. The exogenous combustor and external ducting is part of the fuel cell system and would not be part of the gas turbine development.

These three concerns are much easier to address in the < 2 MW size. Many of the micro turbines have air bearings and most of the micro and mini turbines have external combustors and are designed for or adaptable to recuperation. This means that there is enough room for air off/air back. However, systems that would be coal-based and suitable for "FutureGen" and eventually "Vision 21" type application are going to use much larger gas turbines; ones that now do not, in general, have these capabilities.

The hybrid systems with fuel cells generally have maximum performance when the power produced by the fuel cell is maximized while the gas turbine operates at the resulting temperature achieved by combusting the remaining fuel constituents in the fuel cell exhaust. Depending on fuel cell excess air, fuel utilization, and other cooling requirements, this can be from mid-1500's to over 2200ºF. Temperatures near 2200ºF are on the high side for micro-turbines, while the range from mid-1800's to 2200ºF is typical of mini turbines, and low for larger gas turbines. This requirement will have large implications for hybrid engine applications. This is because for the next several generations of gas turbines, hybrid applications will be a niche market. Thus, the market dictates that any engine development will be for applications other than hybrid, i.e., the engine must be capable of efficient operation as a peak-, intermediate-, or base-load device

on its own right to generate enough sales to justify the development. This means designing for firing temperatures of 1430C + (2600F +) to assure efficiency and meet competition.

POTENTIAL PATHS

The next generation of gas turbines will have to be designed with fuel flexibility and operational flexibility. This means that they will have to be able to burn liquid and gaseous fuels, including syngas (which may be mostly H2 in the case of a "Zero Emission" plant) derived from coal and biomass gasification. Gas turbines must also be designed-in capability to operate efficiently in peaking, intermediate, and base load applications. There are several approaches to meet these requirements, two of which would lend themselves to hybrid applications suitable for FutureGen and Vision 21 power plants. Both of these approaches make use of the advanced materials/coatings and cooling technologies being used in aircraft gas turbines, while future research is these areas would benefit both the aircraft engines as well as these land based engines. The first approach is one having significant operational flexibility and wide market applicability. This is the "aero-frame' engine; i.e., an engine that has the robustness of the frame-type GT but uses aero- derived components for high efficiency and quick start capability. The second approach would be an updated version of the Collaborative Advanced Gas Turbine (CAGT) intercooled aeroderivative engine.

Aero Frame

To fill the market need, the new aero-frame engine must be efficient (> 40% LHV) and of a size that is not available in a new frame engine, e.g., around 100 MW. While existing frame engines are available in the ~ 75 MW and ~ 125 MW range, they are not as efficient nor have the flexibility of the aero-frame. To achieve the efficiency goal, the engine will need to operate with a firing temperature of 1430C + (2600F +) and a pressure ratio over 20, probably in the neighborhood of 25. This is doable with the single shaft, frame-type design. The use of aircraft design techniques will result in higher compressor and turbine efficiencies and advanced air-cooling would allow operation at the required firing temperature without the need for water/steam. This allows the fast starts and stops that peaking and low intermediate use require.

The exhaust temperature from this machine, however, will be in the high 800ºF's, not sufficient to allow a reasonable steam bottoming cycle, where a combined cycle system is desired. One way to achieve good combined cycle operation will be to remove front compressor stages, thereby reducing both flow and overall pressure ratio (thus maintaining constant flow function). The exhaust temperature would increase and a better steam system could be used. The result would be a combined cycle system of around 100 MW (~ 65 MW GT/35 MW ST) with efficiency in the 55%+ range. Thus, one centerline design could answer the peaking and low intermediate range (200 to 1500 hr/yr) as a simple cycle 100 MW GT and meet the high intermediate and baseload requirements (2500 to 6000 hr/yr) as a 100 MW combined cycle. The latter, used singly or in pairs, could form the power island for small FutureGen-type plants where the syngas is used for both power and as a feedstock for hydrogen production.

The lower pressure ratio engine would also be an attractive bottoming engine for a hybrid

plant. The reduction in compressor stages will allow more space for air off/on, a necessity for hybrid use. Coupled with a nominal 125 - 150 MW SOFC, the ~ 65 MW engine would now be operating at a reduced firing temperature, thereby increasing its reliability and availability. Again, this nominal 200 MW hybrid could be used in a Vision 21 version of FutureGen resulting in electrical efficiencies approaching 60% while producing hydrogen.

Another approach to increasing the exhaust temperature for combined cycle applications, while also increasing the engine specific power output, would consist of incorporating reheat between the HP and LP turbines, such as in the Alstom (ABB) GT24. In hybrid applications, a second fuel cell would replace the reheat combustor. It is not obvious whether the overall economics of the hybrid plant are improved when the second fuel cell is added. Factors influencing the outcome are the cost of the fuel cell ($/kW), and the increased cost of the high-temperature piping needed to handle the hot gases. In this alternate approach, there would be no need to remove the front compressor stages and thereby both flow and overall pressure ratio are maintained at their original high values.

Intercooled Aeroderivative

The CAGT intercooled aeroderivative (ICAD) engine was based on intercooling aeroderivative engines in the 60,000 lb thrust range, e.g., the GE 90, PW4000, and the Rolls-Royce Trent. In aircraft form, these engines operate with multiple fan stages on one shaft, the HP compressor on a second shaft, and with overall pressure ratio >30. The premise was to replace the fan stages with a LP compressor and increase the overall pressure ratio (> 40) by "zero staging" the LP compressor, then intercooling between the LP and the existing HP compressor. Power outputs would be in the 100-125 MW range with efficiencies > 45%. Currently, there are now 90,000 lb+ thrust versions of these engines, which would allow larger ICAD engines, say >150 MW+.

The major mechanical changes from aircraft to ground-based engine involved a new LP compressor using lower cost materials, combustor changes to meet NOx emissions, some HP turbine changes to handle increased flow and to reduce cost, and a new, lower cost LP turbine to expand to atmospheric pressure. Additional shaft length to accommodate scrolls for the intercooler would also be needed. The key to keeping development costs to a minimum was keeping gas path the same, thereby allowing the compressors, especially the high compressor to remain unchanged, except for materials.

Like the aero-frame, the ICAD would have flexible operation and cover the range of uses from peaking to baseload. The latter was made attractive because of the high efficiencies; e.g., the PWPS FT4000-based ICAD was projected to have an efficiency of >47% (LHV). In addition, the ICAD design lends itself to advanced cycles such as the HAT. In HAT configuration, the nominal 125 MW ICAD was projected to have an output of 210 MW at 56% (LHV). An improved version with special LP compressor redesign and higher firing temperature was projected to have an output of over 320 MW at 61% (LHV) (Robson, 1993).

As with the aero-frame engine, the ICAD and HAT can be used in hybrid applications. Analyses have shown that using natural gas, efficiencies over 75% (LHV) can be attained with either cycle in fuel cell hybrid applications. The HAT cycle can also effectively be used in non-hybrid application, both with natural gas and with gasification. An advantage shared by both

configurations in hybrid applications is the increased power density, which results in a lower fuel cell/GT power ratio and translates in lower $/kW for the system.

Note that this approach does not preclude addition of reheat to the engine (between the HP and LP turbines), the high overall pressure ratio of the engine being suitable to take full advantage of the reheat.

DEVELOPMENT PLANS

The development of the aero-frame engine would be based on the use of existing compressor gas path designs. This would significantly reduce the cost of development. Similarly, combustor designs would use technology gained from earlier/ongoing studies of low-NOx burners including those capable of burning syn-gas in an environmentally acceptable manner. The design and component test phase would take approximately 40 months. Initial build would commence with long lead items about half way through the first phase and last 24 months. At the end of the fourth year, test of the initial unit would begin and would last approximately one year. Cost for this program as estimated by one of the OEMs is between $200 and $225 million, the program being predicated on a minimum commitment of 8 engines.

The ICAD engine development is likewise based on existing compressor gas path designs. The design and component test phase would take approximately 42 months. Initial build would commence with long lead items about half way through the first phase and last 27 months. At the end of the approximately 54 months, test of the initial unit would begin and would last approximately 15 months. Cost for this program as estimated by one of the OEMs is between $250 and $275 million, the program being predicated on a minimum commitment of 8 engines.

Assuming the ICAD as a starting point, the HAT development would involve an additional technology development phase of 18-24 months to ascertain combustor design and materials requirements. Design and component testing would occupy a further 36 months with a 30-month build phase commencing two years into the design phase. It is projected that a two-year test period would be needed to produce a customer ready engine. An additional $200 million beyond the ICAD would be required as estimated by one of the OEMs, the program being predicated on a minimum commitment of 8 engines.

REFERENCES

1. Robson, F.L., Advanced Turbine Systems Study - System Scoping And Feasibility Study, Doe Contract De-Ac21-92mc29247, United Technologies Research Center, March 1993.

APPENDIX F – ROLLS ROYCE TURBOMACHINERY HARDWARE STATUS

Rolls-Royce

Appendix F – Hardware Status
Rolls-Royce Turbogenerator Development
Final Summary Report
For Subcontract Agreement 2005-1660

Steven G. Berenyi
Rolls-Royce
Allison Mobile Power Systems
September 29, 2006

NO EXPORT RESTRICTIONS

Turbo-machine specification

Current configuration:

- Two tailored "turbochargers" in series
- Nominal airflow matched to RRFCS SOFC requirements
- AMPS automotive style of modular design
- Flow control with by-pass valve and L P shaft speed motor / generator

Long term goal:

- Oil-free (non-contact bearings)

Rolls-Royce

Current project status

- An operational high pressure turbocharger based on proven technology and similarity of hardware to other Rolls-Royce AMPS products
- Sized to match the Rolls-Royce fuel cell cycle system requirements
- Concept initiated -- early 2003
- Detailed design completed -- late 2003
- Procured & assembled -- first operation late 2004
- Under development testing in 2005
- Two units built to date
- Approximately 170 total operational hours accumulated
- Scheduled for initial matching to fuel cell late 2006

Rolls-Royce

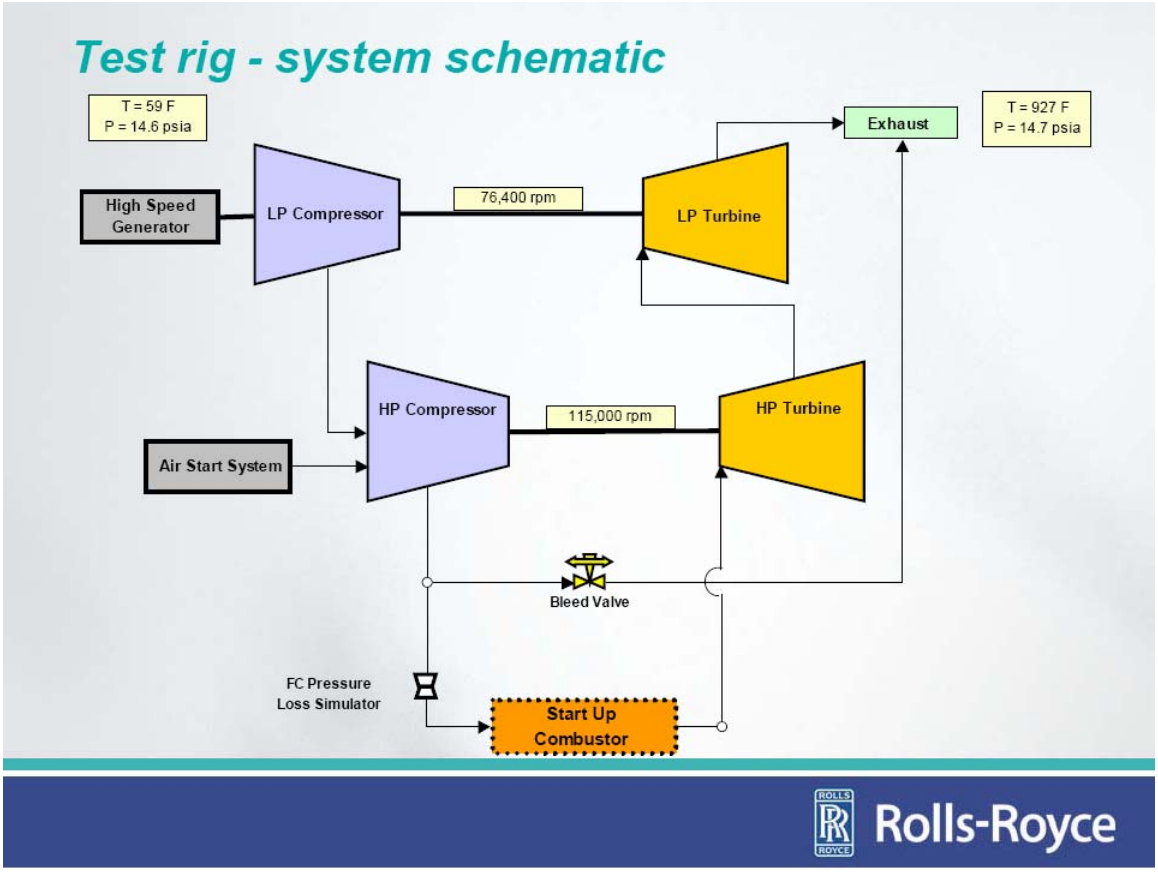
Test rig - system schematic
T = 59 F
P = 14.6 psia
High Speed Generator
LP Compressor
76,400 rpm
LP Turbine
Exhaust
T = 927 F
P = 14.7 psia
HP Compressor
115,000 rpm
HP Turbine
Air Start System
Bleed Valve
FC Pressure Loss Simulator
Start Up Combustor
Rolls-Royce

Hypercharger – major components

- Turbomachinery
- Subsytems:
  - Lube
  - Start (for test rig only)
  - Fuel (for test rig only)
  - Exhaust & vent
  - Bleed control
  - Electrical power
  - Control electronics
  - Generator & power conversion electronics

Rolls-Royce

S/N 30002 Fuel Cell Hypercharger

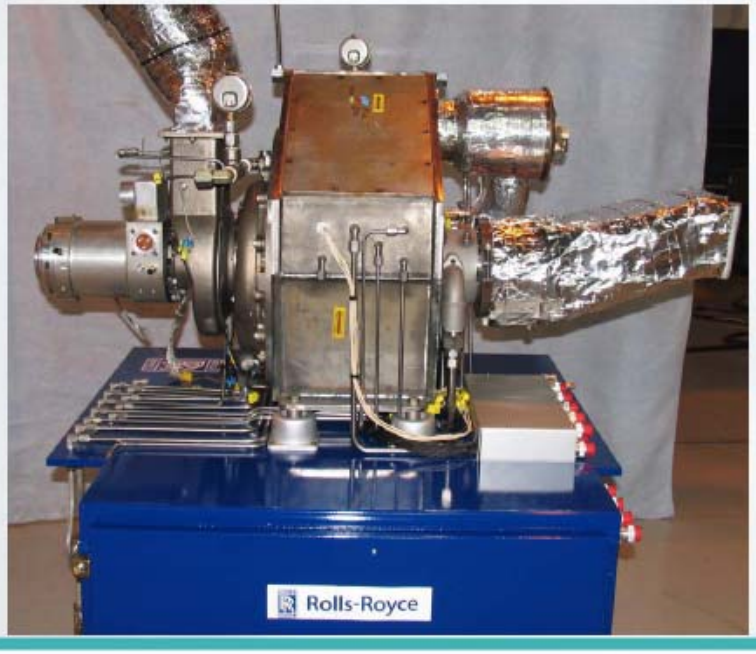

Rolls-Royce

Hardware configuration

- Two stage turbocharger system assembled in modular configuration, consisting of:
  - Inlet system
  - Low pressure module
  - High pressure module
  - Main housing and mounting system
  - Test rig start combustor module
  - High speed motor/generator
  - Accessories

Rolls-Royce

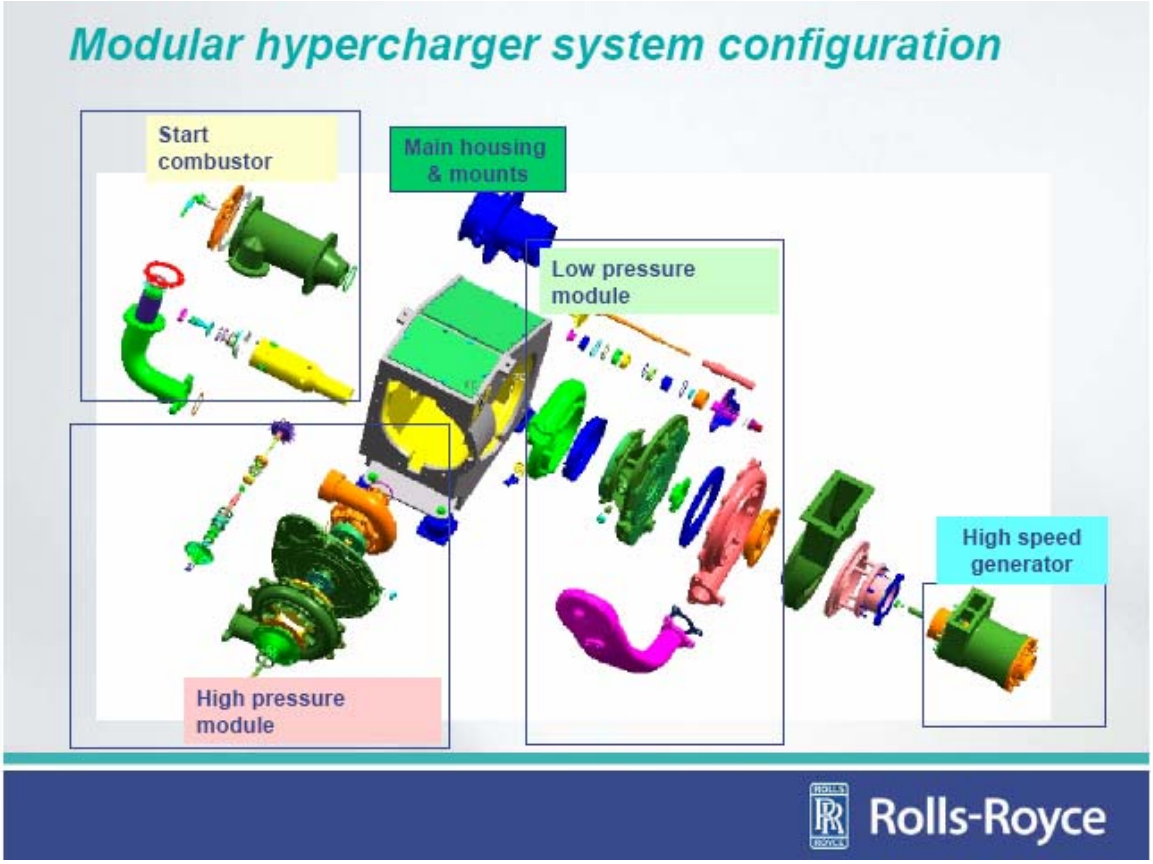
Modular hypercharger system configuration
Start combustor
Main housing & mounts
Low pressure module
High speed generator
High pressure module
Rolls-Royce

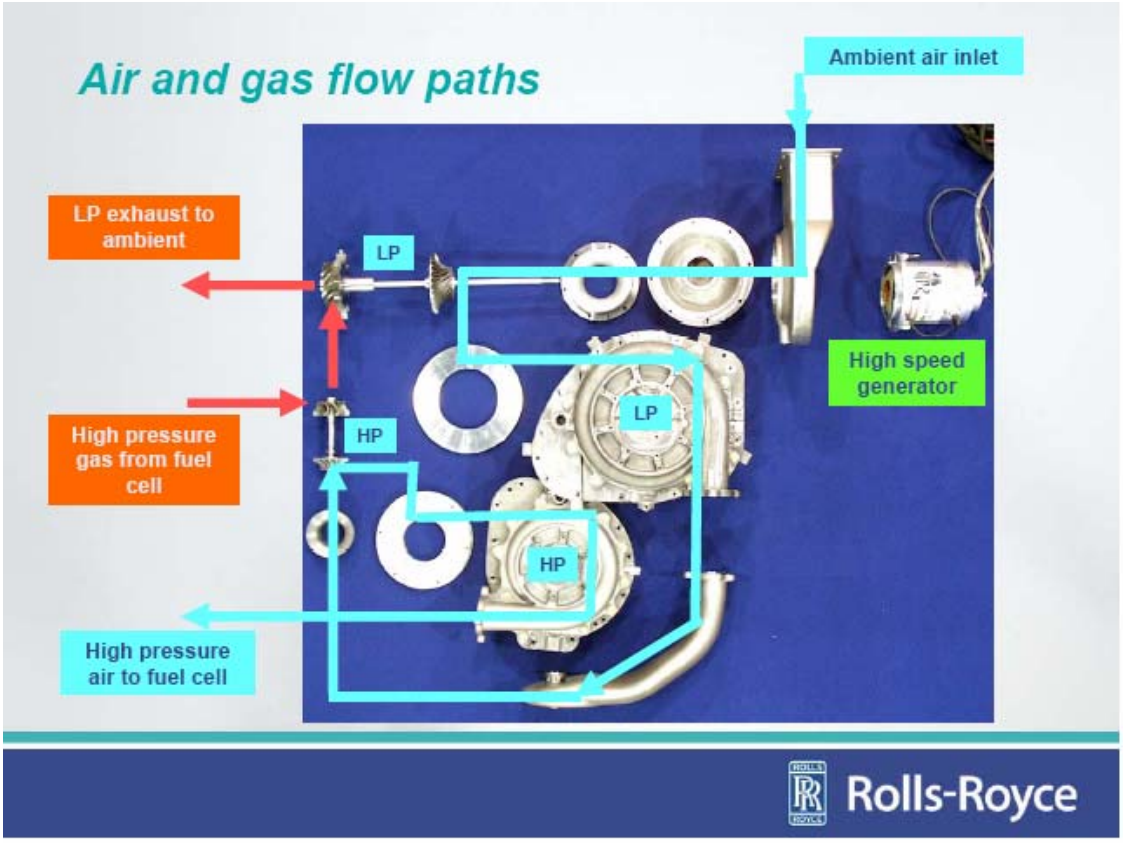
Air and gas flow paths
Ambient air inlet
LP exhaust to ambient
LP
High speed generator
LP
High pressure gas from fuel cell
HP
HP
High pressure air to fuel cell
Rolls-Royce

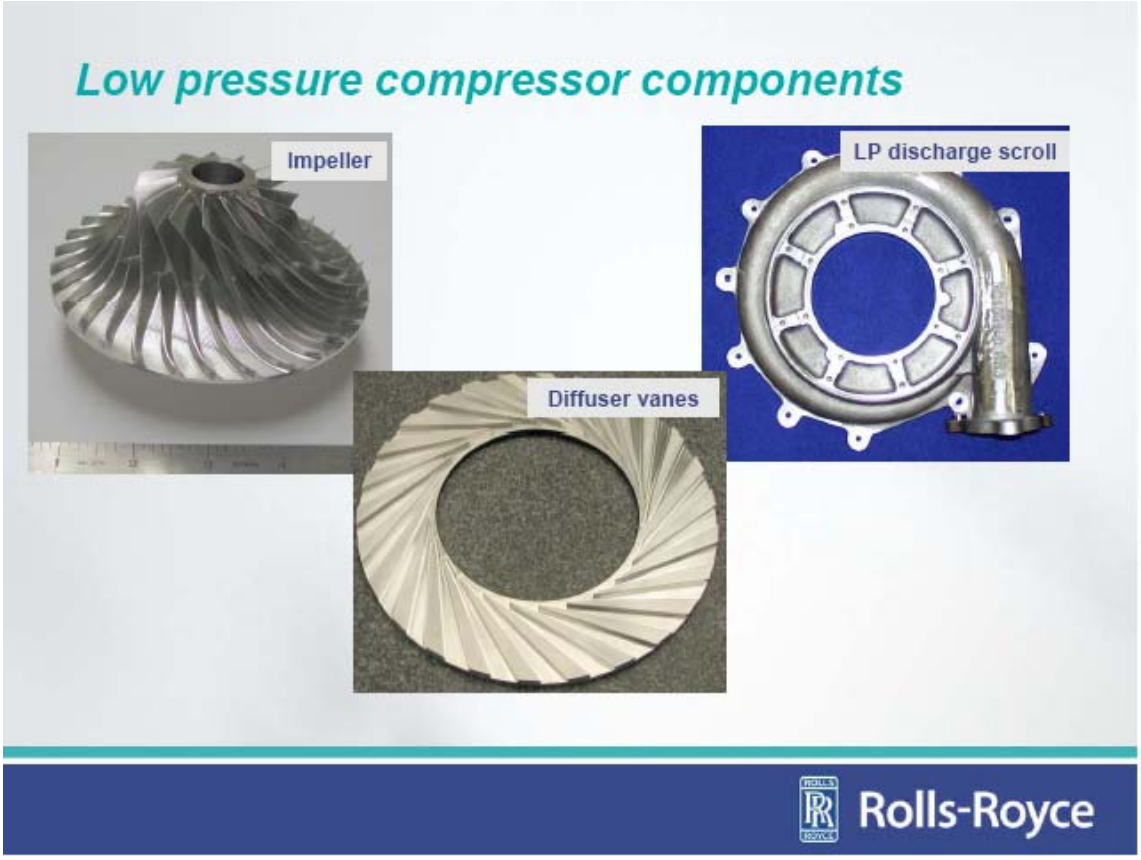
Low pressure compressor components
Impeller
LP discharge scroll
Diffuser vanes
Rolls-Royce

LP rotor assembly (with generator drive shaft extension)

Rolls-Royce

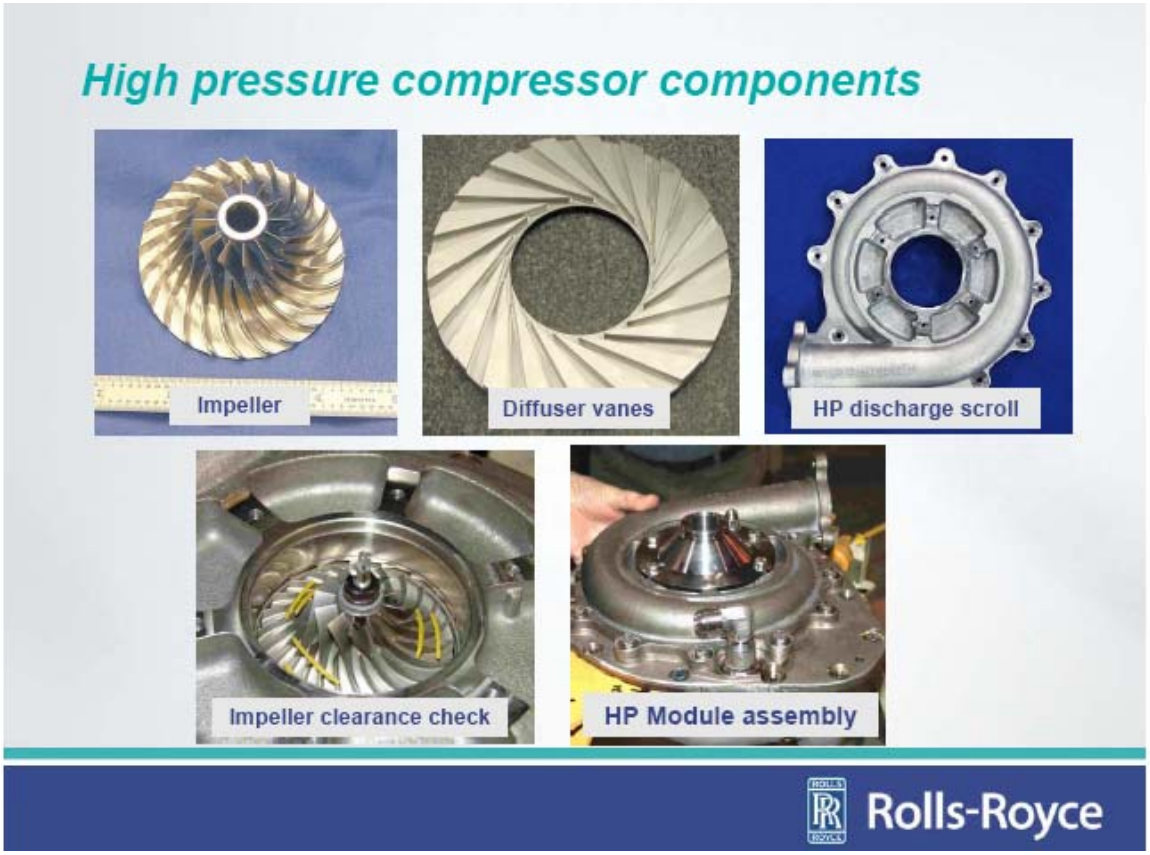
High pressure compressor components
Impeller
Diffuser vanes
HP discharge scroll
Impeller clearance check
HP Module assembly
Rolls-Royce

High pressure turbine rotor casting

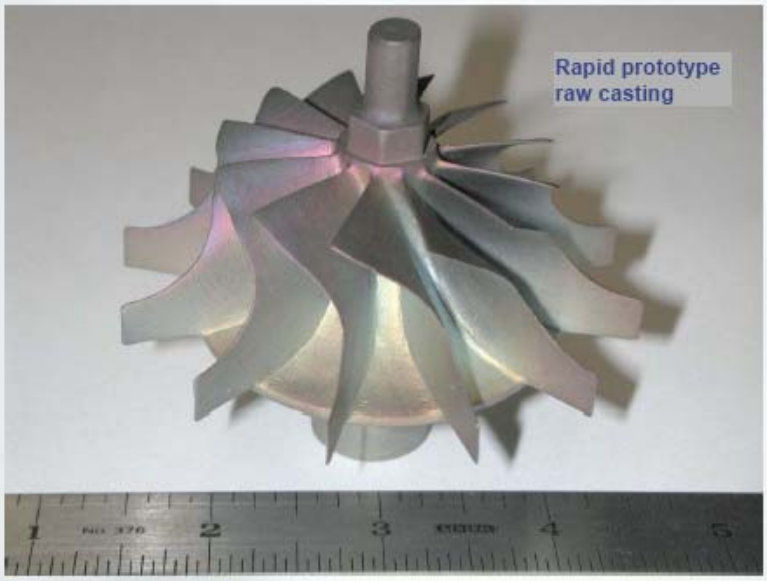

Rolls-Royce

HP rotor assembly

Rolls-Royce

Auxiliary systems

- Start
- Lubrication
- Electrical
- Electronic control module
- Sensors & valves
- Component tray, ducting & wiring
- System enclosure

Rolls-Royce

Cooling, Air Start, and Lube Systems

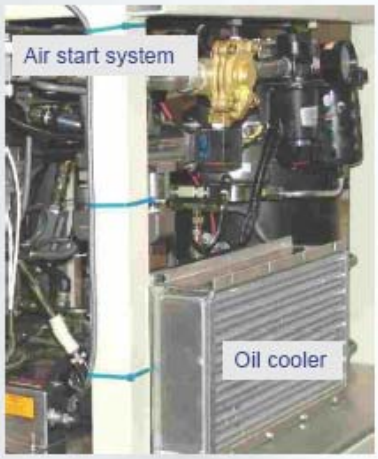

Rolls-Royce

Hypercharger assembly with full accessories

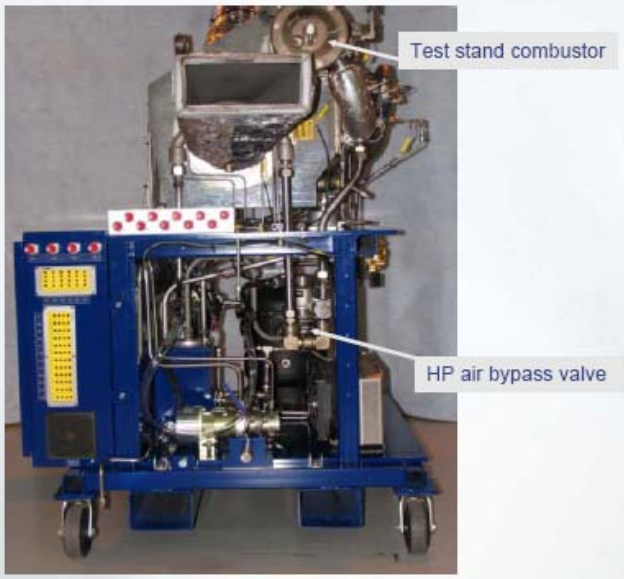

Rolls-Royce

Hypercharger assembly – rear view

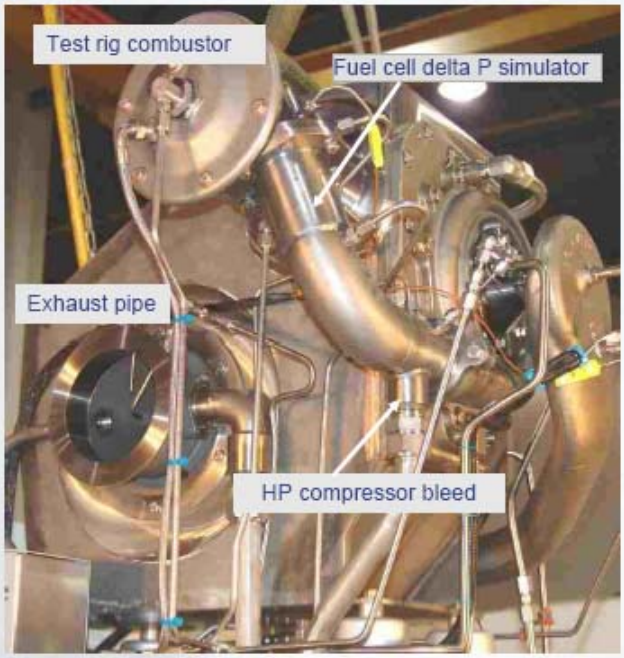

Rolls-Royce

Electrical controls for Hypercharger accessories

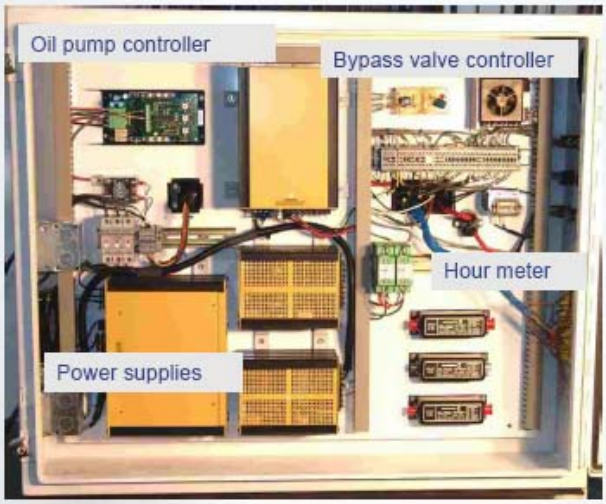

Rolls-Royce

Test rig control system features

- Voltage operating range from 9 to 40 Vdc
- Intel 80C196 microcontroller
  - 20 MHz clock frequency
  - ROM, EEPROM & RAM
- Analog inputs (3)
- Temperature inputs (6)
- Digital inputs (7)
- Frequency inputs (4)
- Digital outputs (6)
- Analog outputs (3)
- Pulse width modulated output (1)
- RS-232 interface for programming, monitoring and local control

Rolls-Royce

Hypercharger assembly with generator installed

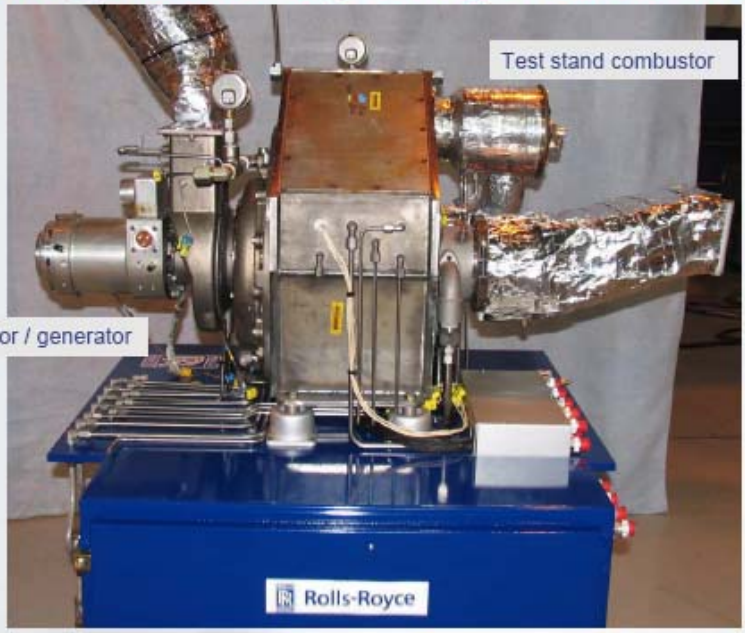

Rolls-Royce

Generator & Power Electronics

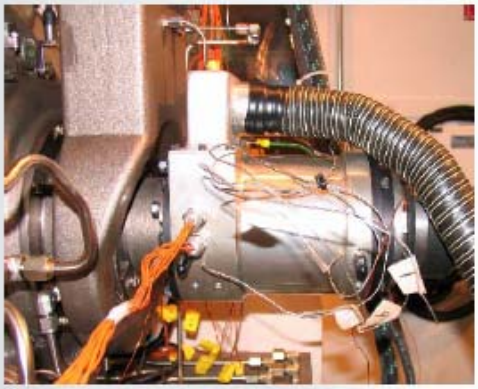

Rolls-Royce

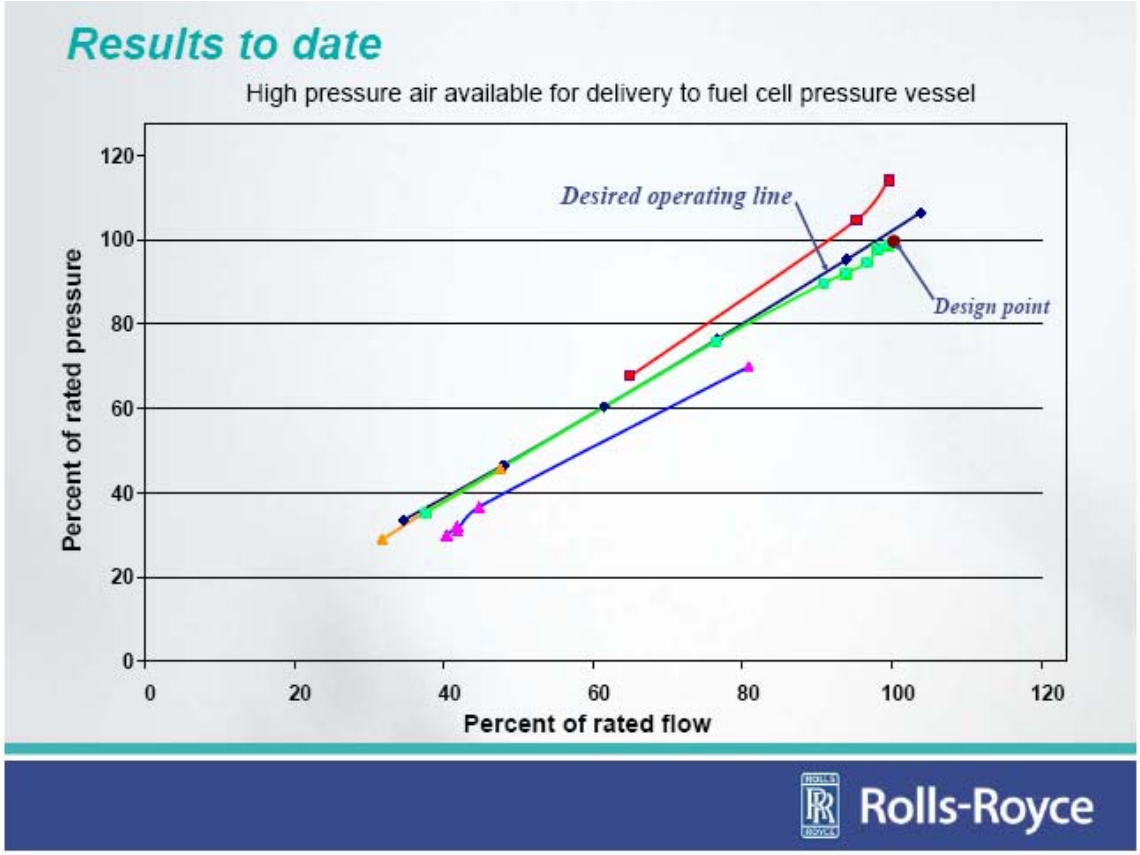
Results to date
High pressure air available for delivery to fuel cell pressure vessel
Desired operating line
Design point
Percent of rated pressure
Percent of rated flow
0
20
40
60
80
100
120
Rolls-Royce

Remaining challenges

- Finalize all operating maps
- Complete the test of the fully integrated high speed generator and electrical power conversion system
- Conduct emissions testing to quantify potential oil contamination in air stream
- Demonstrate long term operational durability
- Complete the integrated fuel cell/hypercharger system packaging design

Rolls-Royce